JT/AT120

Cummins® 6.7

Operator's Manual



CE UK CA

CMW®

Issue 5.0
Original Instruction

053-10025

Overview

Chapter Contents

Serial Number Location 2

Intended Use 3

Equipment Modification 3

Machine Components 4

Regulatory Notices 5

- United States 5
- Canada 5
- RF Exposure Statement 6

RF Exposure Statement 6

Operator Orientation 6

Operating Area. 6

About This Manual 7

- Bulleted Lists 7
- Numbered Lists 7

California Proposition 65

⚠ WARNING Diesel engine exhaust and some of its constituents are known to the State of California to cause cancer, birth defects, and other reproductive harm. www.P65warnings.ca.gov.

Serial Number Location

Record serial numbers and date of purchase in spaces provided. Serial number is located as shown.

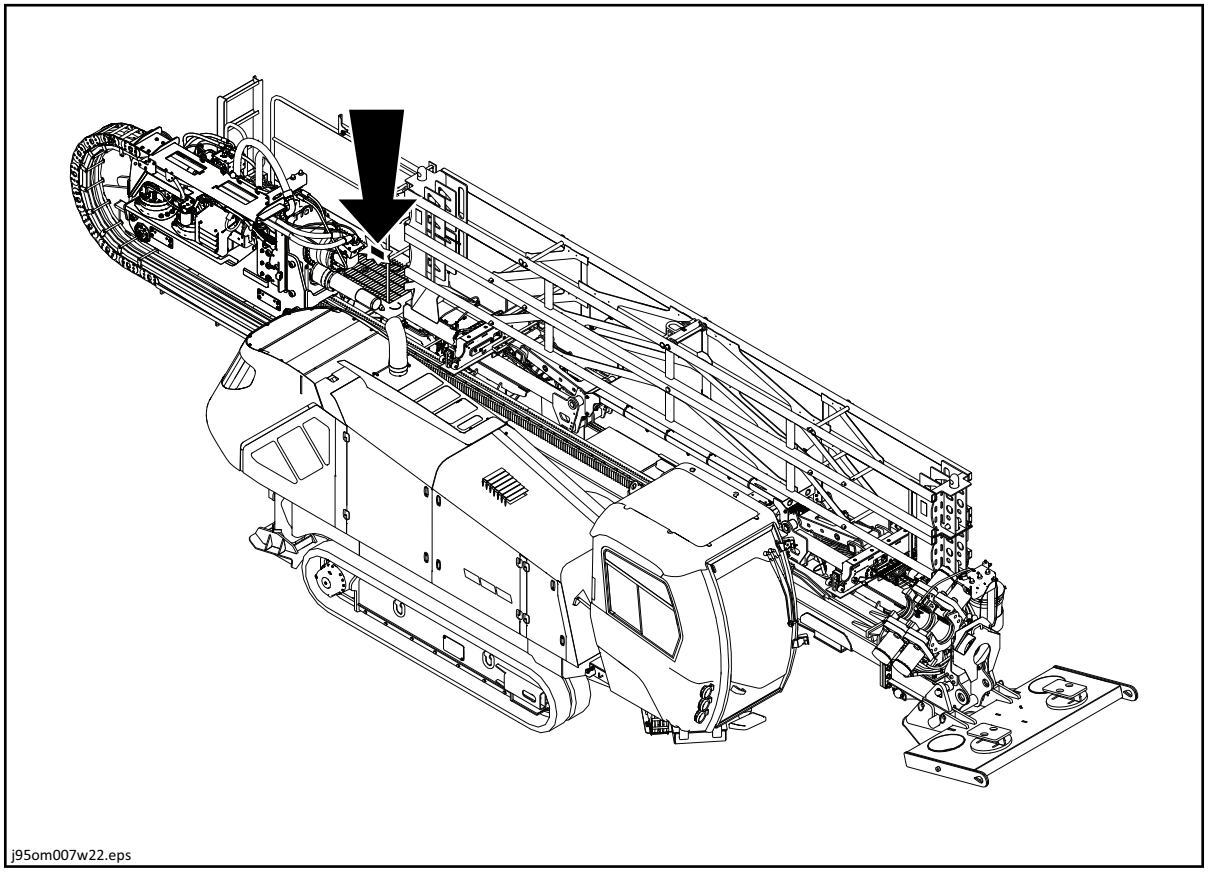

Item	
Date of manufacture	
Date of purchase	
Machine serial number	

Intended Use

The JT/AT120 is a self-contained horizontal directional drill designed to install buried cable and pipe. The AT120 is designed to drill through rock, cobblestone, gravel, and caliche.

This machine is intended for operation only according to the instructions in this manual. Operate machine in ambient temperatures from 10° to 115°F (-12° to 46°C). Contact your Ditch Witch® dealer for provisions required for operating in extreme temperatures. Use in any other way is considered contrary to the intended use.

This machine should be used with genuine Ditch Witch fluid systems and Subsite® tracking equipment. It should be operated, serviced, and repaired only by professionals familiar with its particular characteristics and acquainted with the relevant safety procedures.

Equipment Modification

This equipment was designed and built in accordance with applicable standards and regulations. Modification of equipment could mean that it will no longer meet regulations and may not function properly or in accordance with the operating instructions. Modification of equipment should only be made by competent personnel possessing knowledge of applicable standards, regulations, equipment design functionality/requirements and any required specialized training.

Machine Components

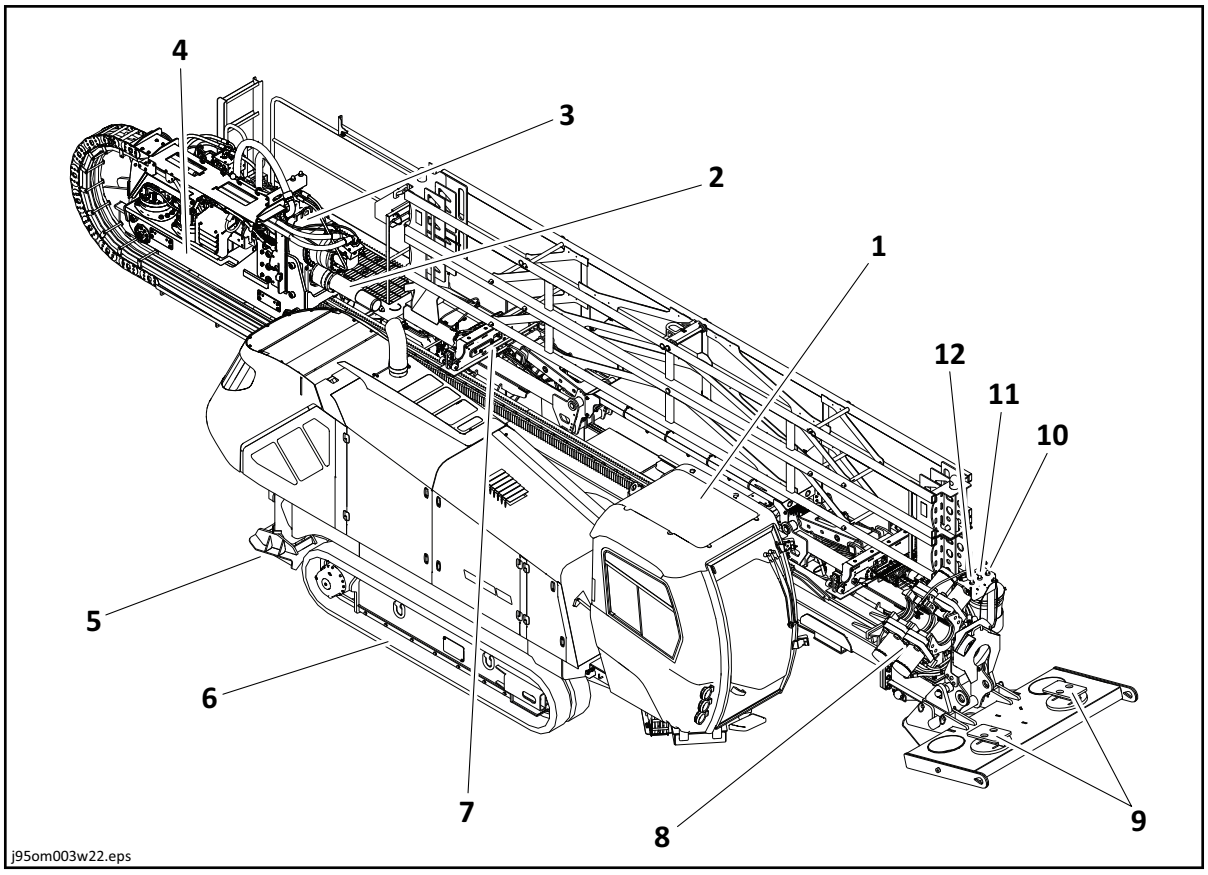

1. Operator station
2. Spindle
3. Carriage
4. Drill frame
5. Stabilizer
6. Tracks
7. Pipe loader
8. Wrenches
9. Anchoring system
10. Wireless remote control indicator (clear)
11. DrillLok® indicator (green)
12. ESID strobe indicator (amber)

Regulatory Notices

United States

This device complies with Part 15 of the FCC Rules. Operation is subject to the following conditions: (1) this device may not cause harmful interference, and (2) this device must accept any interference received, including interference that may cause undesired operation. Changes or modifications not expressly approved by **The Charles Machine Works, Inc.** could void the user's authority to operate the equipment.

This device has been tested and found to comply with the limits for a Class A digital device, pursuant to Part 15 of the FCC rules. These limits are designed to provide reasonable protection against harmful interference when the equipment is operated in a commercial environment. This equipment generates, uses, and can radiate radio frequency energy, and, if not installed and used in accordance with the instructions, can cause harmful interference to radio communications. Operation of this equipment in a residential area could cause harmful interference which the user will be required to correct at his own expense. Changes or modifications not expressly approved by **The Charles Machine Works, Inc.** could void the user's authority to operate the equipment.

This equipment has been tested and found to comply with the limits for a Class B digital device, pursuant to Part 15 of the FCC rules. These limits are designed to provide reasonable protection against harmful interference in a residential installation. This equipment generates, uses and can radiate radio frequency energy and, if not installed and used in accordance with the instructions, may cause harmful interference to radio communications. However, there is no guarantee that interference will not occur in a particular installation. If this equipment does cause harmful interference to radio or television reception, which can be determined by turning the equipment off and on, the user is encouraged to try to correct the interference by one or more of the following measures:

- Reorient or relocate the receiving antenna.
- Increase the separation between the equipment and receiver.
- Connect equipment into an outlet on a circuit different from that to which the receiver is connected.
- Consult the dealer or an experienced radio/TV technician for help.

Contains FCC ID: ITQ-TR2I and KQL-RM02410.

Canada

CAN ICES-2/NMB-2

This device complies with Industry Canada *license-exempt* RSS standard(s). Operation is subject to the following two conditions: (1) this device may not cause interference, and (2) this device must accept any interference, including interference that may cause undesired operation of the device.

Contains IC: 3598A-TR2I and 2268C-RM02410.

Le présent appareil est conforme aux CNR d'Industrie Canada applicables aux appareils radio exempts de licence. L'exploitation est autorisée aux deux conditions suivantes: (1) l'appareil ne doit pas produire de brouillage, et (2) l'appareil doit accepter tout brouillage radioélectrique subi, même si le brouillage est susceptible d'en compromettre le fonctionnement.

Contient IC: 3598A-TR2I and 2268C-RM02410.

RF Exposure Statement

The DrillLok remote must be operated with a minimum separation distance of 7.9 in (20 cm) between the antenna and the user or nearby persons.

The DrillLok remote complies with Health Canada's Safety Code Section 6.

Operator Orientation

IMPORTANT: Top view of machine is shown.

1. Front
2. Right side
3. Rear
4. Left side

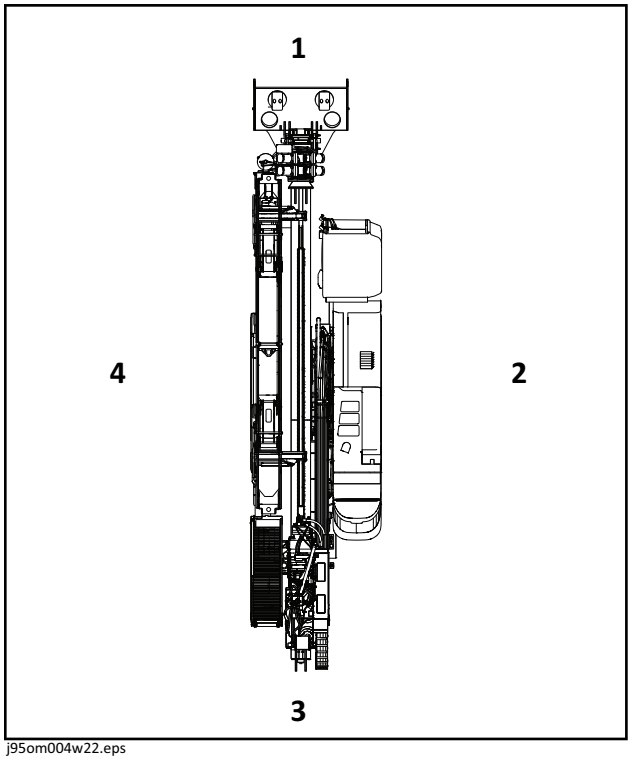

j95om004w22.eps

Operating Area

When using remote control to drive and set up, keep machine within sight at all times. Keep a safe distance away from machine when operating remote control. Operate drilling functions only from seat.

About This Manual

This manual contains information for the proper use of this machine. Cross references such as "See page 50" will direct you to detailed procedures.

Bulleted Lists

Bulleted lists provide helpful or important information or contain procedures that do not have to be performed in a specific order.

Numbered Lists

Numbered lists contain illustration callouts or list steps that must be performed in order.

Foreword

This manual is an important part of your equipment. It provides safety information and operation instructions to help maintain your Ditch Witch equipment.

Read this manual before using your equipment. Keep it with the equipment at all times for future reference. If you sell your equipment, be sure to give this manual to the new owner.

If you need a replacement copy, contact your Ditch Witch dealer. If you need assistance in locating a dealer, visit our website at www.ditchwitch.com or write to the following address:

The Charles Machine Works, Inc.
ATTN: Marketing Department
PO Box 66
Perry, OK 73077-0066
USA

The descriptions and specifications in this manual are subject to change without notice. The Charles Machine Works, Inc. reserves the right to improve equipment. Some product improvements may have taken place after this manual was published. For the latest information on Ditch Witch equipment, see your Ditch Witch dealer.

Thank you for buying and using Ditch Witch equipment.

JT/AT120
Operator's Manual

Cummins® 6.7

Issue number 5.0/OM-03/26
Part number 053-10025

Copyright 2022, 2023, 2024, 2025, 2026
by The Charles Machine Works, Inc.

, Ditch Witch, Power Pipe, DrillLok, Rockmaster, SaverLok, and Subsite are registered trademarks of The Charles Machine Works, Inc.

This product and its use may be covered by one or more patents at http://patents.charlesmachine.works.

Contents

Overview 1

Machine serial number, information about the type of work this machine is designed to perform, basic machine components, and how to use this manual

Foreword 9

Part number, revision level, and publication date or this manual, and factory contact information

Safety 13

Machine safety alerts and emergency procedures

Prepare 23

Procedures for preparing jobsite, preparing operator, and preparing equipment

Controls 41

Machine controls, gauges and indicators and how to use them

Drive 75

Procedures for startup, cold start, driving, and shutdown

Transport 81

Procedures for lifting, hauling, and towing

Conduct a Bore 87

Procedures for drilling and backreaming

Systems and Equipment 113

Information about anchors, cruise control, downhole tools, drill pipe, drilling fluid, DrillLok system, electric strike system, and wireless remote control

Complete the Job 149

Procedures for restoring the jobsite and rinsing and storing equipment

Maintenance 153

Maintenance intervals and instructions for this machine including lubrication, replacement of wear items, and basic maintenance

Specifications 193

Machine specifications including weights, measurements, power ratings, and fluid capacities

Support 201

The warranty policy for this machine and procedures for obtaining warranty consideration and training

Safety

Chapter Contents



For additional precautions, see "Prepare" chapter.

Safety Alert Classification 14

Guidelines 15

Emergency Procedures 16

- Electric Strike Description 16
- If an Electric Line is Damaged 17
- If a Gas Line is Damaged 17
- If a Fiber Optic Cable is Damaged 18
- If Machine Catches on Fire 18

Machine Safety Alerts 19

Safety Alert Classifications

These classifications and the icons defined on the following pages work together to alert you to situations which could be harmful to you, jobsite bystanders or your equipment. When you see these words and icons in the book or on the machine, carefully read and follow all instructions. YOUR SAFETY IS AT STAKE.

Watch for the three safety alert levels: **DANGER**, **WARNING** and **CAUTION**. Learn what each level means.

⚠ DANGER indicates a hazardous situation that, if not avoided, will result in death or serious injury. This signal word is to be limited to the most extreme situations.

⚠ WARNING indicates a hazardous situation that, if not avoided, could result in death or serious injury.

⚠ CAUTION indicates a hazardous situation that, if not avoided, could result in minor or moderate injury.

Watch for two other words: ***NOTICE*** and **IMPORTANT**.

NOTICE indicates information considered important, but not hazard-related (e.g., messages relating to property damage).

IMPORTANT can help you do a better job or make your job easier in some way.

Guidelines



⚠ WARNING Misuse of machine can cause death or serious injury. Read and understand operator's manual and all other safety instructions before use. Know how to use all controls.

Follow these guidelines before operating any jobsite equipment:

- Complete proper training.
- Read and understand operator's manual before using equipment.
- Wear personal protective equipment including long pants, hard hat, eye protection, hearing protection, and protective footwear.
- Do not wear jewelry or loose clothing.
- Mark proposed path with white paint and have underground utilities located before working. In the US or Canada, call 811 (US) or 888-258-0808 (US and Canada). Also contact any local utilities that do not participate in the One-Call service. In countries that do not have a One-Call service, contact all local utility companies to have underground utilities located.
- Classify jobsite based on its hazards and use correct tools and machinery, safety equipment, and work methods for jobsite.
- Mark jobsite clearly and keep spectators away.
- Review jobsite hazards, safety and emergency procedures, and individual responsibilities with all personnel before work begins. Safety videos are available from your Ditch Witch dealer or at www.ditchwitch.com/safety. Safety Data Sheets (SDS) are available at www.ditchwitch.com/support.
- Ensure jobsite is adequately lit. Arrange for secondary light sources as needed.
- Complete the equipment checklist located at www.ditchwitch.com/safety.
- Fully inspect equipment before operating. Repair or replace any worn or damaged parts. Replace missing or damaged safety shields and safety alert signs. Contact your Ditch Witch dealer for assistance.
- Follow instructions on all safety alert signs on machine.
- Keep access steps and platforms clean and free of obstacles and debris.
- Use equipment carefully per the instructions in this manual. Stop operation and investigate anything that does not look or feel right.
- Do not operate machine where flammable gas may be present.
- Only operate equipment in well ventilated areas.
- Always tie down equipment and properly stow accessories, even if traveling short distances.
- Contact your Ditch Witch dealer if you have any questions about operation, maintenance, or equipment use.

Emergency Procedures

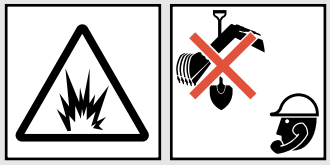

WARNING Underground utilities. Contact can cause death or serious injury. Locate and verify underground utilities before digging or drilling.

Before operating any equipment, review emergency procedures and check that all safety precautions have been taken.

EMERGENCY SHUTDOWN: Shut off machine or press remote engine stop button or emergency stop button (if equipped).

If emergency stop button is used to stop machine, inspect the machine to determine the reason for activation before re-enabling. Ensure ignition switch is in the off position before re-enabling.

Electric Strike Description

When working near electric cables, remember the following:

- Electricity follows all paths to ground, not just path of least resistance.
- Pipes, hoses, and cables will conduct electricity back to all equipment.
- Low voltage current can injure or kill. Many work-related electrocutions result from contact with less than 440 volts.

Most electric strikes are not noticeable, but indications of a strike include:

- power outage
- smoke
- explosion
- popping noises
- arcing electricity

If any of these occur, or if strike alarm sounds or flashes, assume an electric strike has occurred.

If an Electric Line is Damaged

If you suspect an electric line has been damaged, DO NOT MOVE. Take the following actions. The order and degree of action will depend on the situation.

- If you are **on machine or bonded equipment:**
  - REMAIN ON MACHINE.
  - Reverse drilling direction and try to break contact. Do not touch drill pipe with hands or hand-held tools.
  - Press electric strike system test button.
  - If alarm sounds again, stay where you are and wait for electric company to shut off power.
  - If alarm does not sound or there is no other indication of a strike, wait at least one full minute before moving away from equipment. Utility might use automatic reclosers which will restart current flow.
  - If alarm sounds again while waiting, stay where you are until electric company shuts off power.
  - If alarm does not sound but all lights in strike indicator are on, assume strike is continuing and stay where you are until electric company shuts off power.
- If you are **off the machine or bonded equipment,** DO NOT TOUCH ANY EQUIPMENT connected to machine**:**
  - If you must leave the area, take small steps with feet close together to reduce the hazard of being shocked from one foot to the other.
  - If you leave, do not return to area or allow anyone into area until given permission by electric company.
- Warn people nearby that an electric strike has occurred. Instruct them to leave the area.
- Have someone contact electric company to shut off power.
- Do not resume drilling or allow anyone into area until given permission by electric company.

If a Gas Line is Damaged

If you suspect a gas line has been damaged, take the following actions. The order and degree of action will depend on the situation.

- Immediately shut off engine(s), if this can be done safely and quickly.
- Remove any ignition source(s), if this can be done safely and quickly.
- Warn others that a gas line has been cut and that they should leave the area.
- After warning others to leave the area, leave jobsite as quickly as possible.
- Immediately call your local emergency phone number and utility company.
- If jobsite is along street, stop traffic from driving near jobsite.
- Do not return to jobsite until given permission by emergency personnel and utility company.

If a Fiber Optic Cable is Damaged

Do not look into cut ends of fiber optic or unidentified cable. Vision damage can occur. Contact utility company.

If Machine Catches on Fire

Perform emergency shutdown procedure and then take the following actions. The order and degree of action will depend on the situation.

- Immediately move battery disconnect switch (if equipped and accessible) to disconnect position.
- If fire is small and fire extinguisher is available, attempt to extinguish fire.
- If fire cannot be extinguished, leave area as quickly as possible and contact emergency personnel.

Machine Safety Alerts

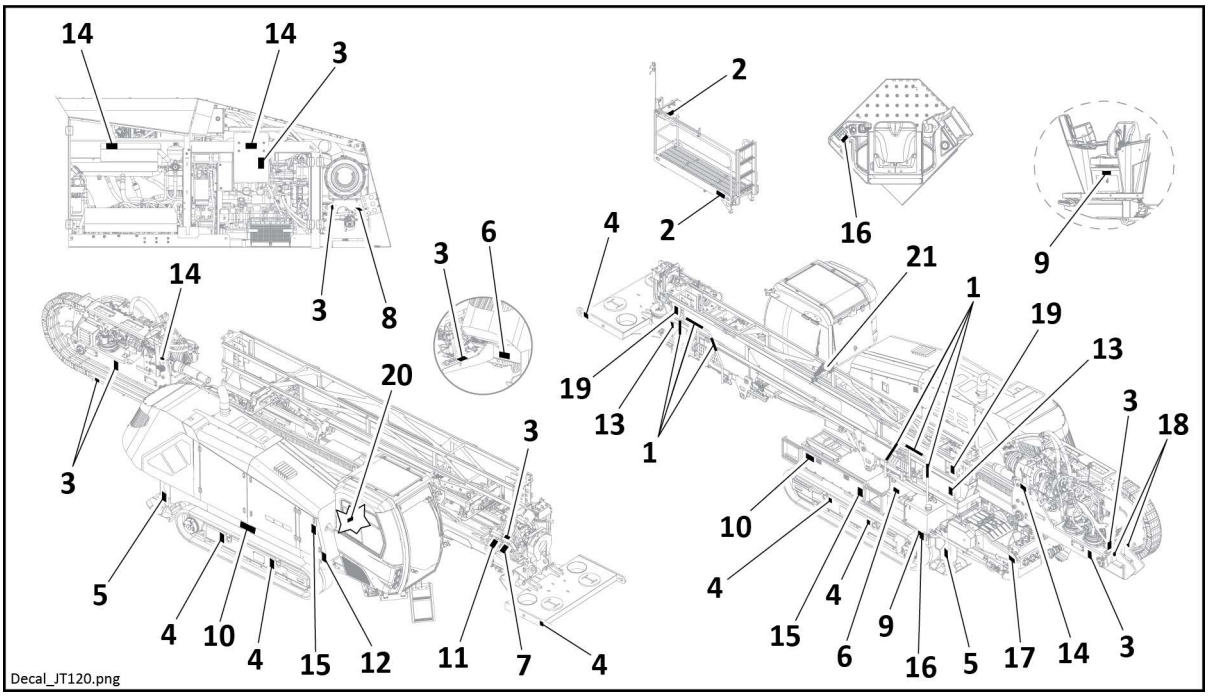

1		DANGER stripe decal. See Parts Manual for replacement part numbers.
2	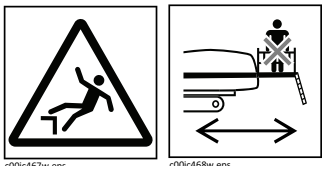	**⚠ WARNING** Moving machine. Fall can cause death or serious injury. Never allow riders.
3	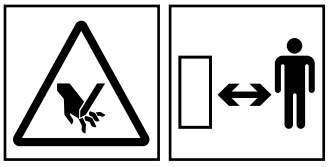	**⚠ WARNING** Moving parts. Contact can cause serious injury. Stay away.
4		Tiedown location. See Transport chapter for more information.

5	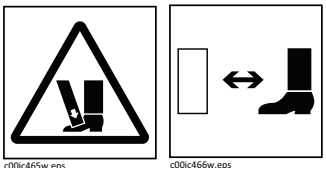	**⚠ WARNING** Moving parts. Contact can cause serious injury. Stay away.
6	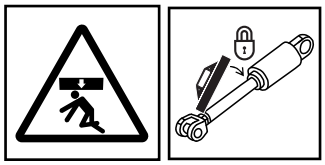	**⚠ WARNING** Raised component. Crushing can cause death or serious injury. Stay away or secure raised component with locking device. Use correct equipment and procedures.
7		**⚠ DANGER** Moving or thrown tools. Impact will cause death or serious injury. Never use pipe wrenches on drill string. Follow procedure in operator's manual.
8	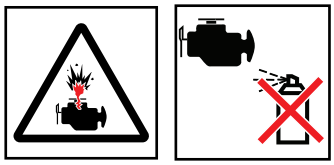	**⚠ WARNING** Pre-heater. Fire or explosion can cause death or serious injury. Never use starter fluid.
9	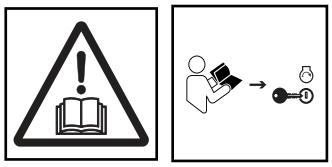	**⚠ WARNING** Misuse of machine can cause death or serious injury. Read and understand operator's manual and all other safety instructions before use. Know how to use all controls.
10	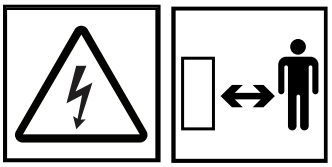	**⚠ DANGER** Buried electrical lines. Contact will cause death or serious injury. Know location of lines. Stay away.
11	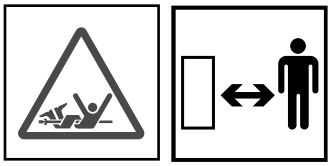	**⚠ DANGER** Rotating shaft. Crushing will cause death or serious injury. Stay away.
12	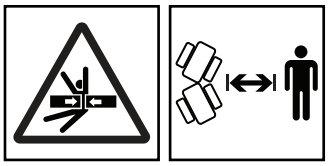	**⚠ WARNING** Moving parts. Crushing can cause death or serious injury. Stay away from moving parts and their range of movement.

13	 	**⚠ WARNING** Unsecured pipe box. Crushing can cause death or serious injury. Secure maximum of two boxes.
14	 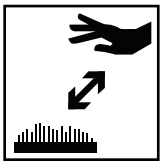	**⚠ CAUTION** Hot parts. Contact can cause burns. Only touch when cool or wear gloves.
15	 	**⚠ WARNING** Remote-controlled equipment. Impact can cause death or serious injury. Stay away.
16	 	**⚠ WARNING** Underground utilities. Contact can cause death or serious injury. Locate and verify underground utilities before digging or drilling.
17	 	**⚠ WARNING** Pressurized fluid or air. Contact can cause death or serious injury. Refer to operator's manual for correct use.
18		High visibility reflectors. See Parts Manual for replacement part numbers.
19	 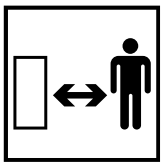	**⚠ WARNING** Lifted load. Crushing can cause death or serious injury. Stay away from lifted load and its range of movement.
20		Emergency exit. Push window out to exit cab when door is blocked or inoperable.

Prepare

Chapter Contents



See "Safety" for additional precautions.

Wear proper personal protective equipment.

Prepare Jobsite 24

- Review Job Plan 24
- Select Start and End Points 24
- Identify Hazards 25
- Locate Utilities 26
- Classify Jobsite 27
- Arrange for Traffic Control 29
- Plan Bore Path 29
- Examine Pullback Material 34
- Prepare Entry Point 35

Prepare Operator 36

Prepare Equipment 37

- Check Supplies 37
- Check Equipment 38
- Assemble Accessories 39

Prepare Jobsite



WARNING Underground utilities. Contact can cause death or serious injury. Locate and verify underground utilities before digging or drilling.

To help avoid injury:

- Expose lines by careful hand digging or soft excavation before operating equipment. Use appropriate equipment and procedures for exposing utility lines.
- All vegetation near operator's station must be removed. Contact with trees, shrubs, or weeds during electrical strike could result in electrocution.
- Classify jobsite and follow precautions based on classification.
- Follow local regulations for digging near utilities.

A successful job begins before working. The first step in planning is reviewing information already available about the job and jobsite.

Review Job Plan

Review blueprints or other plans and make sure you have taken bore enlargement during backreaming and pullback into account. Check for information about existing or planned structures, elevations, or proposed work that may be taking place at the same time.

Select Start and End Points

Select one end to use as a starting point. Consider the following when selecting a starting point:

Slope

Equipment should be parked on a level site. Consider how slope will affect setup and operation. Assess the risks on each slope to determine if factors affecting risks create an unsafe condition for working. See "Slope Guidelines" on page 78.

Space

Check that starting and ending points allow enough space for working. See "Minimum Setback" on page 33.

Comfort

Consider shade, wind, fumes, and other site features.

Drill downhill when possible so fluid will flow away from drilling unit.

Identify Hazards

Inspect jobsite before transporting equipment. Check for the following:

- overall grade or slope
- changes in elevation such as hills or open trenches
- obstacles such as buildings, railroad crossings, or streams
- signs of utilities
  - "buried utility" notices
  - gas or water meters
  - drop boxes
  - manhole covers
  - utility facilities without overhead lines
  - junction boxes
  - light poles
  - sunken ground
- traffic
- access
- soil type and condition
- water supply
- sources of locator, tracker, or guidance equipment interference (rebar, railroad tracks, etc.)

> ***NOTICE:*** All tracking equipment is subject to magnetic interference. The presence of interference can cause inaccuracies in both location and depth calculations. See tracker or locator operator's manual for more information.

Take soil samples from several locations along bore path to determine best bit and backreamer combinations.

Locate Utilities

Notify One-Call Services

Mark proposed path with white paint and have underground utilities located before working.

- In the US or Canada, call 811 (US) or 888-258-0808 (US and Canada). Also contact any local utilities that do not participate in the One-Call service.
- In countries that do not have a One-Call service, contact all local utility companies to have underground utilities located.

Verify Underground Utilities

Have an experienced locating equipment operator sweep area within 20' (6 m) to each side of proposed excavation to verify previously marked line and cable locations. Mark location of all buried utilities and obstructions.

Locate Overhead Lines

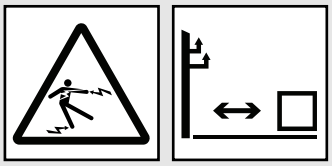

DANGER Overhead electrical lines. Contact will cause death or serious injury. Know location of lines. Stay away.

Note location and height of all overhead lines in jobsite and ensure that equipment maintains proper distance from live lines.

Classify Jobsite

Select a Classification

Jobsites are classified according to underground hazards present, not by line being installed. Jobsite may have more than one classification.

If working . . .	then classify jobsite as . . .
within 10' (3 m) of a buried electric line	electric
within 10' (3 m) of a natural gas line	natural gas
in concrete, sand, or granite which is capable of producing crystalline silica dust	crystalline silica dust
within 10' (3 m) of any other hazard	other

Classify jobsite as electric if jobsite is in question or if the possibility of unmarked electric utilities exists.

Apply Precautions



⚠ WARNING Underground utilities. Contact can cause death or serious injury. Locate and verify underground utilities before digging or drilling.

Once classified, precautions appropriate for jobsite must be taken. Follow US Department of Labor regulations on excavating and trenching (Part 1926, Subpart P) and other similar regulations.

Electric Jobsite Precautions

In addition to using a directional drilling system with an electric strike system, use one or both of these methods:

- Expose line by careful hand digging or soft excavation. Use beacon to track bore path. If utility must be crossed, tracker operator must watch the drill head during drilling and backreaming. The tracker operator must have communication with the drill operator or DrillLok system must be enabled with the DrillLok key in the tracker operator's possession.
- Have service shut down while work is in progress. Have electric company test lines before returning them to service.

Natural Gas Jobsite Precautions

Position equipment upwind from gas lines and use one or both of these methods:

- Expose line by careful hand digging or soft excavation. Use beacon to track bore path. If utility must be crossed, tracker operator must watch the drill head during drilling and backreaming. The tracker operator must have communication with the drill operator or DrillLok system must be enabled with the DrillLok key in the tracker operator's possession.
- Have service shut down while work is in progress. Have gas company test lines before returning them to service.

Crystalline Dust Jobsite Precautions

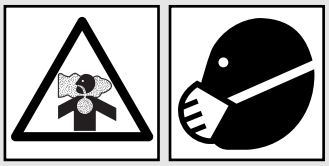

⚠ WARNING Silica dust. Exposure can cause lung disease or cancer. Use breathing protection.

Crystalline silica dust is a naturally occurring substance found in soil, sand, concrete, granite, and quartz.

To reduce exposure when cutting, drilling, or working these materials:

- Use water spray or other means to control dust.
- Refer to US Occupational Safety and Health Administration (OSHA) guidelines or other applicable regulating guidelines for appropriate breathing protection or dust control methods.

Other Jobsite Precautions

You may need to use different methods to safely avoid other underground hazards. Talk with those knowledgeable about hazards present at each site to determine which precautions should be taken or if job should be attempted.

Clear objects such as landscaping fabric, cable, and wire from the work area. These objects may be underground or partially buried.

Arrange for Traffic Control

Vehicle and pedestrian traffic must be a safe distance from equipment. Evaluate jobsite and allow an appropriate buffer zone around equipment. If working near a road or other traffic area, contact local authorities about safety procedures and regulations.

Plan Bore Path

Plan the bore path, from entry to end, before drilling begins. Subsite bore planning software is available for planning your bore path. This special software can be run in the field using a laptop computer or mobile device. See your Ditch Witch dealer for details.

NOTICE: If not using bore planning software, see "Bore Path Calculator" on page 34.

For complicated bores, consult an engineer. Have the jobsite surveyed and bore path calculated. Be sure the engineer knows minimum entry pitch, bend limits of drill pipe, bend and tension limits of pullback material, pipe lengths, and location of all underground utilities.

For less complicated bores, plan the bore based on four measurements:

- recommended bend limit
- entry pitch
- minimum setback
- minimum depth

Recommended Bend Limits

IMPORTANT: Consider recommended bend limits during any bend, not just during bore entry.

Ditch Witch drill pipes are designed to bend slightly during operation. Slight bending allows for steering and correcting direction. Bending beyond recommended limits will cause damage that might not be visible. This damage adds up and will later lead to sudden drill pipe failure.

Pipe Pitch

NOTICE: Bending drill pipe more sharply than recommended will damage pipe and cause failure over time. Maximum changes in pitch within 1-2' (300-600 m) of pipe create sharp bends that will damage pipe.

Ditch Witch drill pipe is tested to bend at a maximum percent pitch.

Ensure pitch (A) changes no more than the following percentages over the full length of each pipe. Monitor the pitch of each pipe with tracker remote display on the operator's console. See tracking system operator's manual.

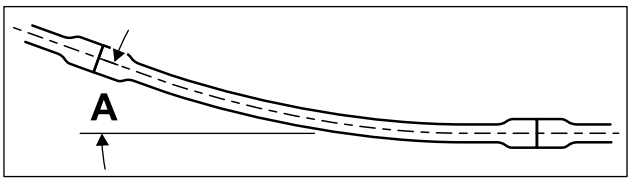

j07om003c.eps

Drill Pipe	Percentage
JT120 Power Pipe® HD	9.8%
JT120 Power Pipe	9.8%

Bend Radius

NOTICE: Bending drill pipe more sharply than recommended will damage pipe and cause failure over time. If bend radius is reduced, drill pipe life is reduced.

IMPORTANT: Use following charts to keep bends within safe limits.

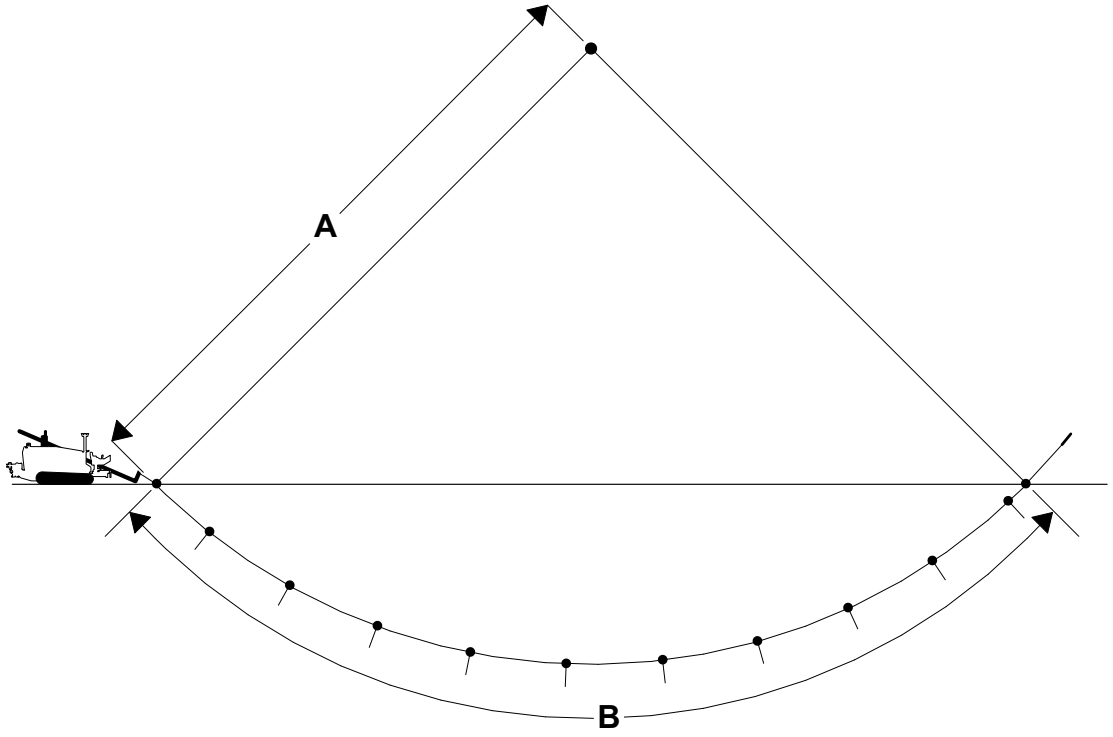

j07om004c.eps

Drill Pipe	Tested Minimum Bend Radius	Radius (A)*	Length Needed (B)*
Power Pipe HD	205' (62.5 m)	205' (62.5 m)	322' (98.1 m)
Power Pipe	205' (62.5 m)	205' (62.5 m)	322' (98.1 m)

*Measurements are based on a 90° bend in the bore path.

Pipe-By-Pipe Bend Limits

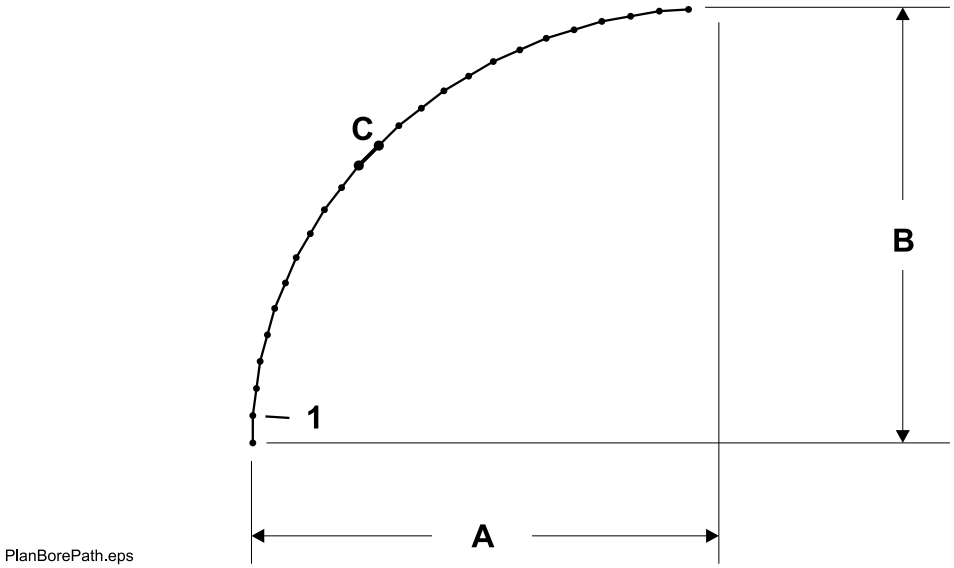

Power Pipe/Power Pipe HD				
Pipe (C)	**Forward (B)**		**Deflection (A)**	
1	19’ 11.6”	5.9 m	0’ 11.7”	0.3 m
2	39’ 9”	12.1 m	3’ 10.6”	1.2 m
3	59’ 1.8”	18.0 m	8’ 8.5”	2.3 m
4	77’ 11.9”	23.8 m	15’ 4.8”	4.7 m
5	96’ 1.1”	29.3 m	23’ 10.7”	7.3 m
6	113’ 3.3”	34.5 m	34’ 1.2”	10.4 m
7	129’ 4.7”	39.4 m	45’ 11.2”	14.0 m
8	144’ 3.3”	44.0 m	59’ 3.4”	18.1 m
9	157’ 9.4”	48.1 m	74’ 0.2”	22.6 m
10	169’ 9.6”	51.8 m	89’ 11.9”	27.4 m
11	180’ 2.5”	54.9 m	107’ 0.8”	32.6 m
12	188’ 10.8”	57.6 m	125’ 0.8”	38.1 m
13	195’ 9.6”	59.7 m	143’ 10”	43.8 m
14	200’ 10.2”	61.2 m	163’ 2.1”	49.7 m
15	203’ 11.8”	62.2 m	182’ 11”	55.8 m
16	205’ 2.2”	62.5 m	202’ 10.5”	61.8 m
17	205’ 2.4”	62.5 m	205’ 2.4”	62.5 m

Entry Pitch

Entry pitch is the slope of the drill frame compared with the slope of the ground. Determine entry pitch one of the two following ways.

With Pitch Beacon

1. Lay pitch beacon on ground and read pitch. Record this number.
2. Lay pitch beacon on drill frame and read pitch. Record this number.
3. Subtract ground pitch from drilling unit pitch.

With Measurements

1. Measure from ground to front end of drill frame (H1).
2. Measure from ground to back end of drill frame (H2).
3. Subtract (H2-H1). Record this number.
4. Measure the distance between front and back points (C).
5. Divide distance (H2-H1) by C, then multiply by 100 as shown. This is the pitch.

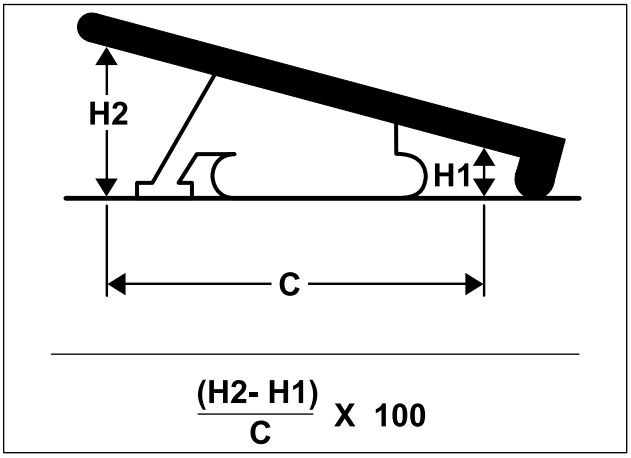

j07om006c.eps

Minimum Setback

Minimum setback is the distance from the entry point to where pipe becomes horizontal (A1).

IMPORTANT: If setback is too small (A2), bend limits of the pipe will be exceeded and the pipe will be damaged.

A shallow entry pitch (B1) allows pipe to become horizontal sooner and with less bending. Increasing entry pitch (B2) creates a longer and deeper minimum setback.

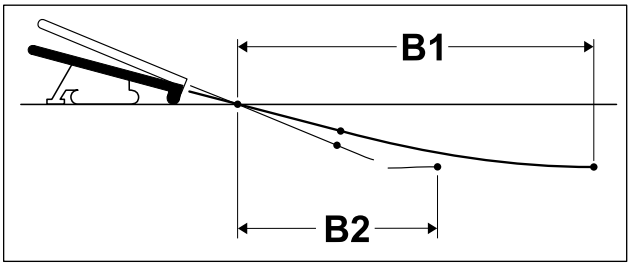

j07om008c.eps

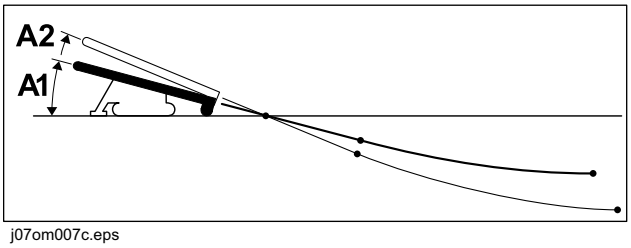

j07om007c.eps

Minimum Depth

Minimum depth is how deep the pipe will be when it becomes horizontal. Because pipe must bend gradually, entry pitch and bend limits determine this measurement.

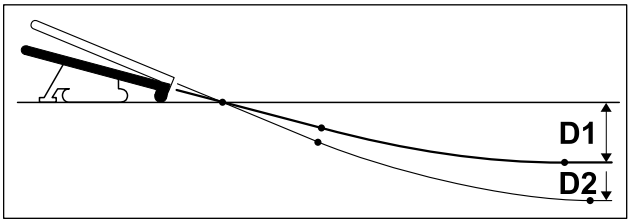

j07om009c.eps

- To reduce minimum depth (D1), reduce entry pitch. This also decreases setback.
- To increase minimum depth (D2), increase entry pitch. This also increases setback.

Bore Path Calculator

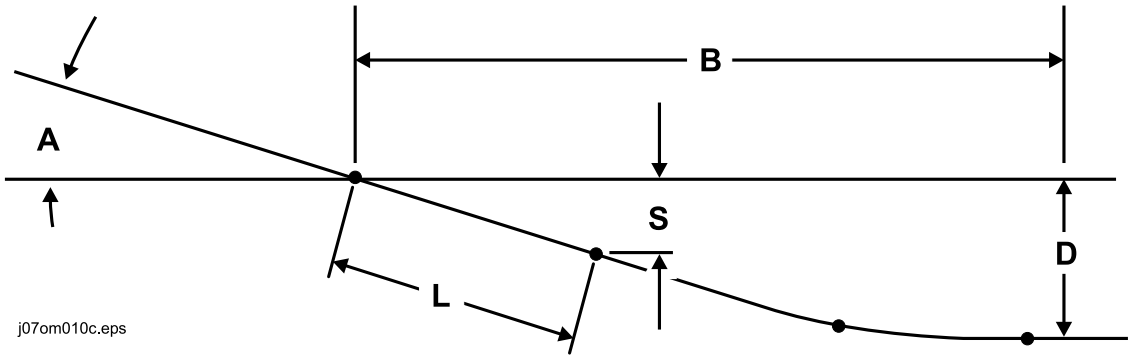

j07om010c.eps

Power Pipe/Power Pipe HD			
Minimum Depth (D)	**Entry Pitch (A)**	**Setback (B)**	**Depth to Begin Steering (S)**
5’ 3” (1.6 m)	18% / 10.0°	47’ 6” (14.8 m)	2’ 1” (0.6 m)
6’ 5” (1.96 m)	20% / 11.3°	52’ 2” (15.9 m)	2’ 5” (0.7 m)
7’ 8” (2.34 m)	22% / 12.7°	56’ 9” (17.3 m)	2’ 8” (0.8 m)
9’ (2.74 m)	25% / 14.0°	61’ 4” (18.7 m)	2’ 11” (0.9 m)
10’ 6” (3.20 m)	27% / 15.3°	65’ 10” (20.1 m)	3’ 3” (1.0 m)
12’ 1” (3.68 m)	30% / 16.7°	70’ 5” (21.5 m)	3’ 6” (1.1 m)
13’ 10” (4.22 m)	32% / 18.0°	74’ 10” (22.8 m)	3’ 9” (1.1 m)

*Numbers in table based on 205’ (37.49 m) minimum bend radius and beacon housing, EZ-Connect connector, transition sub, and one-third of first drill pipe (L, totaling 12’ [3.66 m]) in the ground before steering.

Examine Pullback Material

Ask for a sample of the material you will be pulling back. Check its weight and stiffness. Contact the manufacturer for bend radius information. Check that you have appropriate pullback devices.

Prepare Entry Point

For bore to be successful, first pipe must be straight as it enters the ground. See "Align the Joints" on page 132.

To help ensure that the first pipe does not bend, dig a small starting hole so that the first pipe is drilled into a vertical surface.

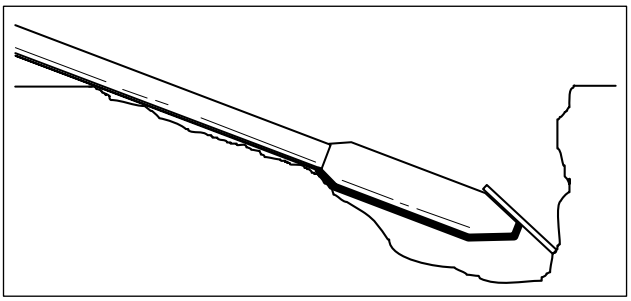

j07om011c.eps

To prevent bending or straining pipe, position drilling unit for straight entry.

Prepare Operator



WARNING Jobsite hazards. Exposure can cause death or serious injury. Use correct equipment and work methods. Use and maintain appropriate safety equipment.

To help avoid injury:

- Wear personal protective equipment including hard hat, safety eye wear, foot protection, hearing protection, and gloves (except when near rotating equipment).
- Remove jewelry.
- Tie back long hair.
- Wear close-fitting, high visibility clothing.
- Have other personal protective equipment, such as insulated boots and gloves, breathing protection, and face shield, etc. available for use depending on jobsite hazards or requirements.

Follow these guidelines before operating any jobsite equipment:

- Complete proper training and read operator's manual before using equipment.
- Plan for emergency services. Have the telephone numbers for local emergency and medical facilities on hand. Check that you will have access to a telephone.
- Review jobsite hazards, safety and emergency procedures, and individual responsibilities with all personnel before work begins. Safety videos are available from your Ditch Witch dealer or at www.ditchwitch.com/safety. Safety Data Sheets (SDS) are available at www.ditchwitch.com/support.
- Use equipment carefully. Stop operation and investigate anything that does not look or feel right.

Any time jobsite is classified as electric, drill operator and tracker operator must wear protective boots, and the drill operator must have protective gloves within reach, all meeting the following requirements:

- Boots must have high tops and must be rated for the voltage on the jobsite. Tuck legs of pants completely inside boots.
- Gloves must be rated for the voltage on the jobsite.

Prepare Equipment

Check Supplies

- fuel
- diesel exhaust fluid (DEF), if needed
- plunger lubrication oil, if needed
- keys
- marking flags or paint
- notepad and pencil
- spare fuses
- lubricants
- receiver/transmitter or tracker
- extra batteries for accessories and equipment
- beacons
- two-way radios
- exit side breakout wrench
- transition sub
- anchoring equipment and accessories
- bits, screens, and nozzles
- adapters, pipe, and beacon housings
- marking flags or paint
- water and additional hoses
- drilling fluid and additives
- backreamers, swivels, and pulling devices
- wash down hose and spray gun
- duct tape
- spray lubricant
- tool joint compound

Check Equipment

Fluid Levels

- fuel
- engine oil
- diesel exhaust fluid (DEF), if needed
- hydraulic fluid
- engine coolant
- plunger oil, if needed

Condition and Function

- all controls

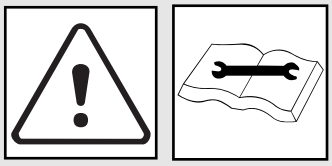

WARNING Improper control function. Use can cause death or serious injury. If control does not work as described in instructions, stop machine and have it serviced.

- battery
- hoses and valves
- pumps and motors
- tires or tracks
- signs, guards, and shields
- couplers and fittings
- water tank(s)
- fluid pump
- filters (air, oil, hydraulic)
- belts

Assemble Accessories

Fire Extinguisher

Mount a fire extinguisher near the power unit but away from possible points of ignition where shown. The fire extinguisher should always be classified for both oil and electric fires. It should meet legal and regulatory requirements.

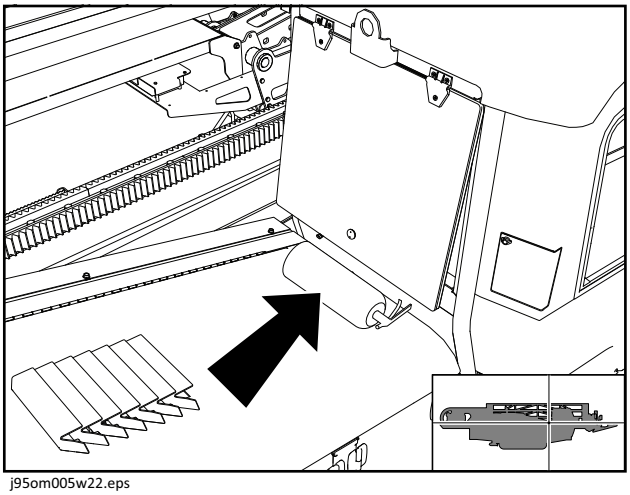

j95om005w22.eps

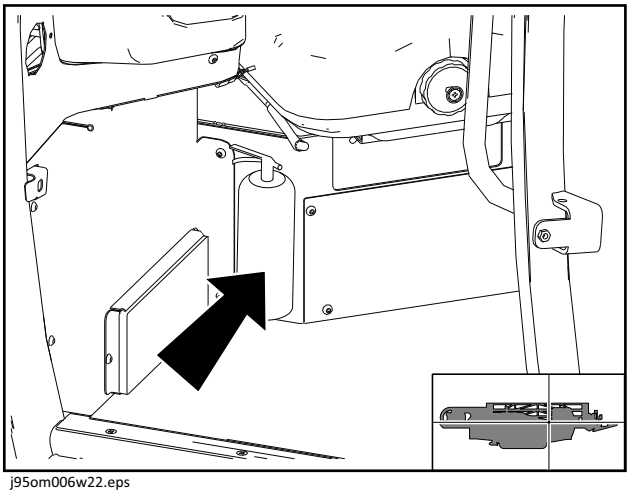

j95om006w22.eps

Controls

Chapter Contents

Battery Disconnect 42

Cab 43

- Controls 43
- Seat 46

Console, Left 48

- Drilling/Operation 48
- Miscellaneous 53
- Pipe Loading 54

Console, Right 58

Console, Set-Up 62

- Controls 62
- Wireless Remote Control 64

Engine Compartment 71

Wireline Restricted Operating Mode (ROM) 74

Battery Disconnect

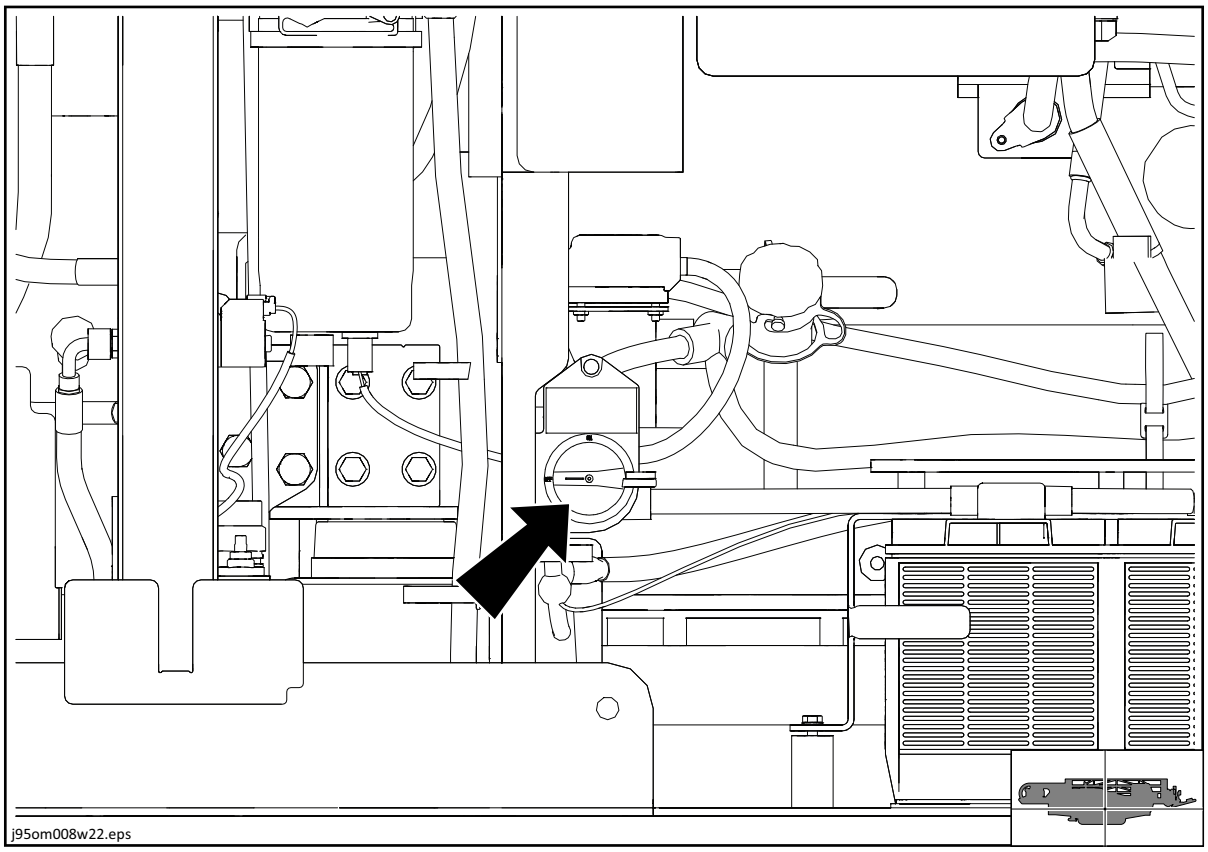

Item	Description	IMPORTANT
Battery disconnect 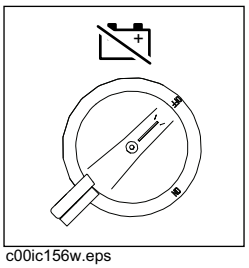 c00ic156w.eps	To connect, move right. To disconnect, move left.	***NOTICE:*** • Do not disconnect with engine running. • Wait two minutes after turning engine off before disconnecting battery.

Cab

Controls

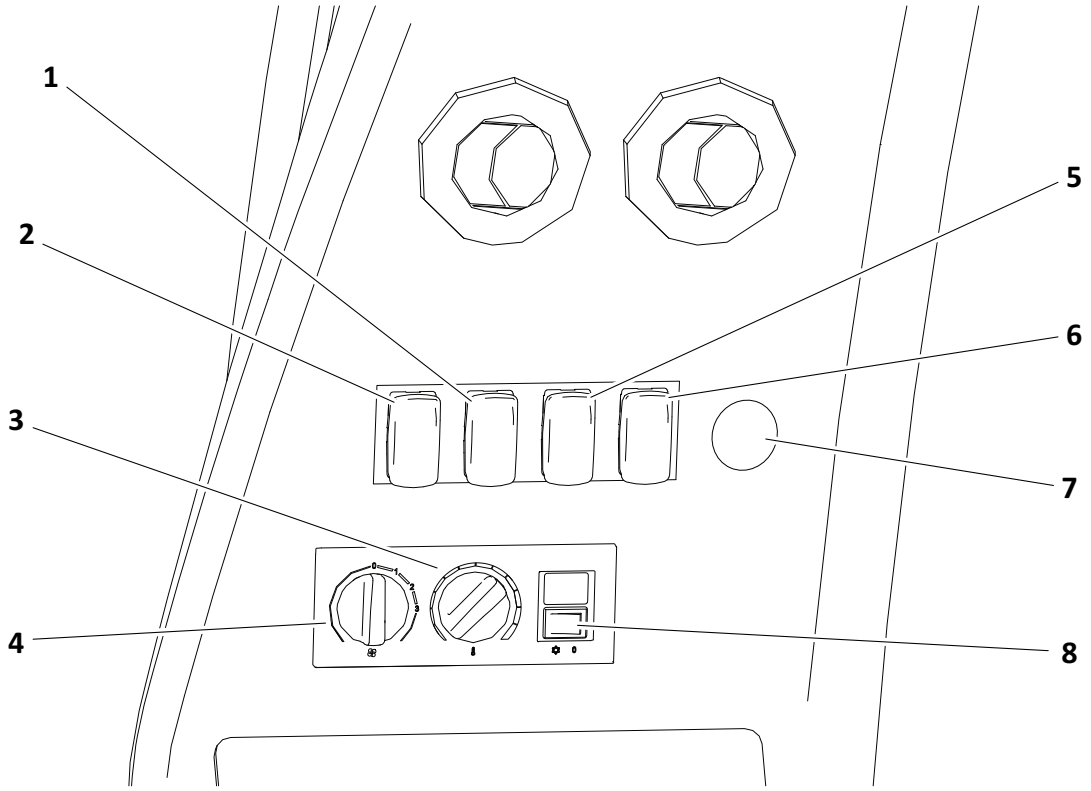

j95om060w22.eps

1. Door wiper switch
2. Left wiper switch
3. Air temperature control
4. Fan speed control
5. Washer fluid switch
6. Work light switch
7. Emergency stop button
8. Air conditioner switch

Item	Description	IMPORTANT
1. Door wiper switch 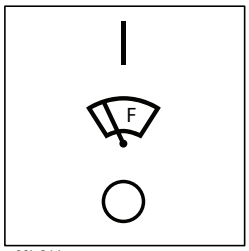 c00ic214w.eps	To turn on, press top. To turn off, press bottom.	
2. Left wiper switch 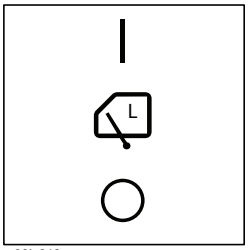 c00ic212w.eps	To turn on, press top. To turn off, press bottom.	
3. Air temperature control 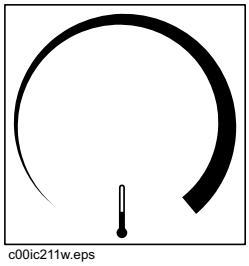 c00ic211w.eps	To increase temperature, move right. To decrease temperature, move left.	
4. Fan speed control 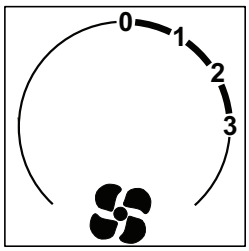 c00ic205w.eps	To increase fan speed, move right. To decrease fan speed, move left.	

Item	Description	IMPORTANT
5. Washer fluid switch 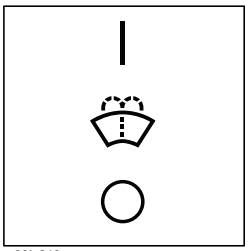 c00ic213w.eps	To turn on, press top. To turn off, press bottom.	
6. Work light switch 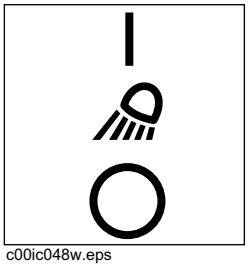 c00ic048w.eps	To turn on, press top. To turn off, press bottom.	
7. Emergency stop switch 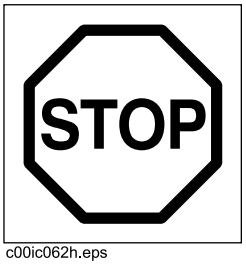 c00ic062h.eps	To stop machine, press. To re-enable emergency stop, pull.	If used to stop machine, inspect the machine to determine the reason for activation before re-enabling. If used to stop machine, ensure ignition switch is in the off position before re-enabling.
8. Air conditioner switch 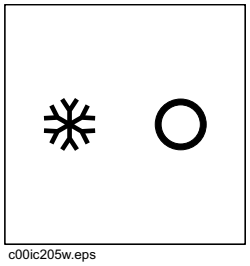 c00ic205w.eps	To turn on, press left. To turn off, press right.	

Seat

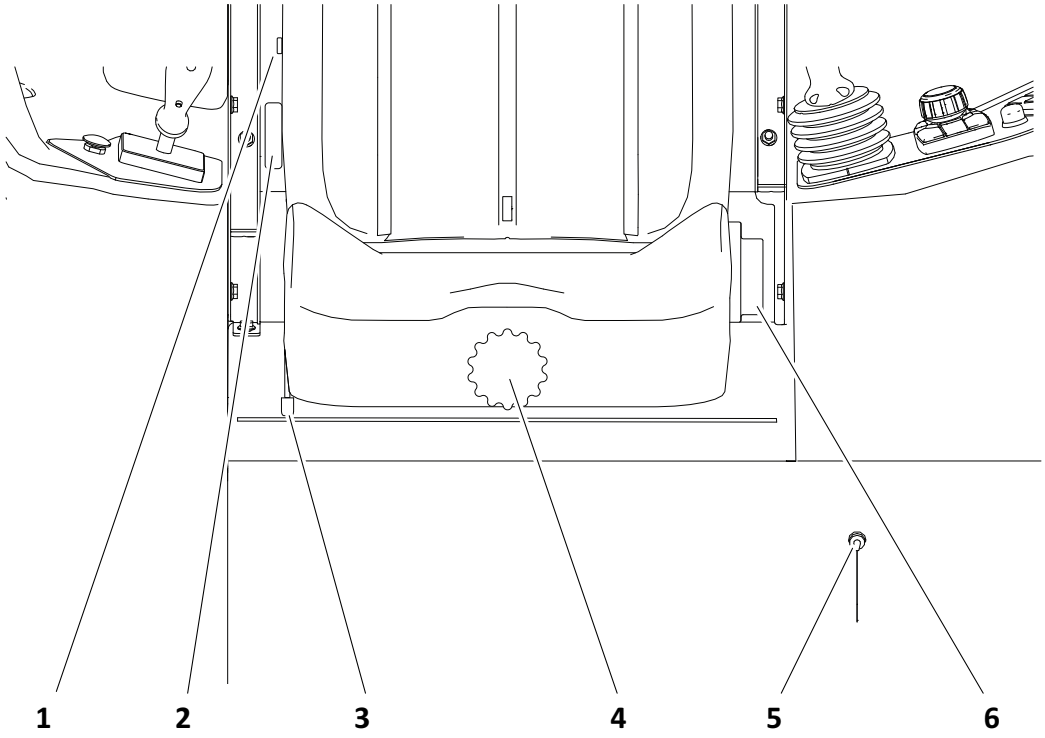

j87om007w21.eps

1. Heat switch
2. Lumbar support control
3. Slide control
4. Suspension control
5. Cab controller EDT port
6. Recline control

Item	Description	IMPORTANT
1. Heat switch 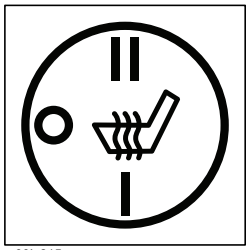 c00ic215w.eps	To turn on high, press top. To turn off, move to middle. To turn on low, press bottom.	

Item	Description	IMPORTANT
2. Lumbar support control	To increase lumbar support, move down. To decrease lumbar support, move up.	
3. Slide control  c00ic095h.eps	To slide forward or backward, move right. To lock seat into position, release.	
4. Suspension control 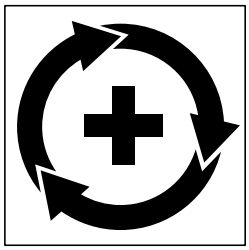 c00ic216w.eps	To adjust to approximate body weight for additional comfort, move left or right.	
5. Cab controller EDT port	For use only by qualified Ditch Witch technicians.	
6. Recline control 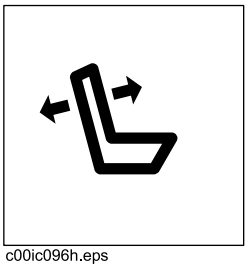 c00ic096h.eps	To recline, move backward. To raise, move forward.	

Console, Left

Drilling/Operation

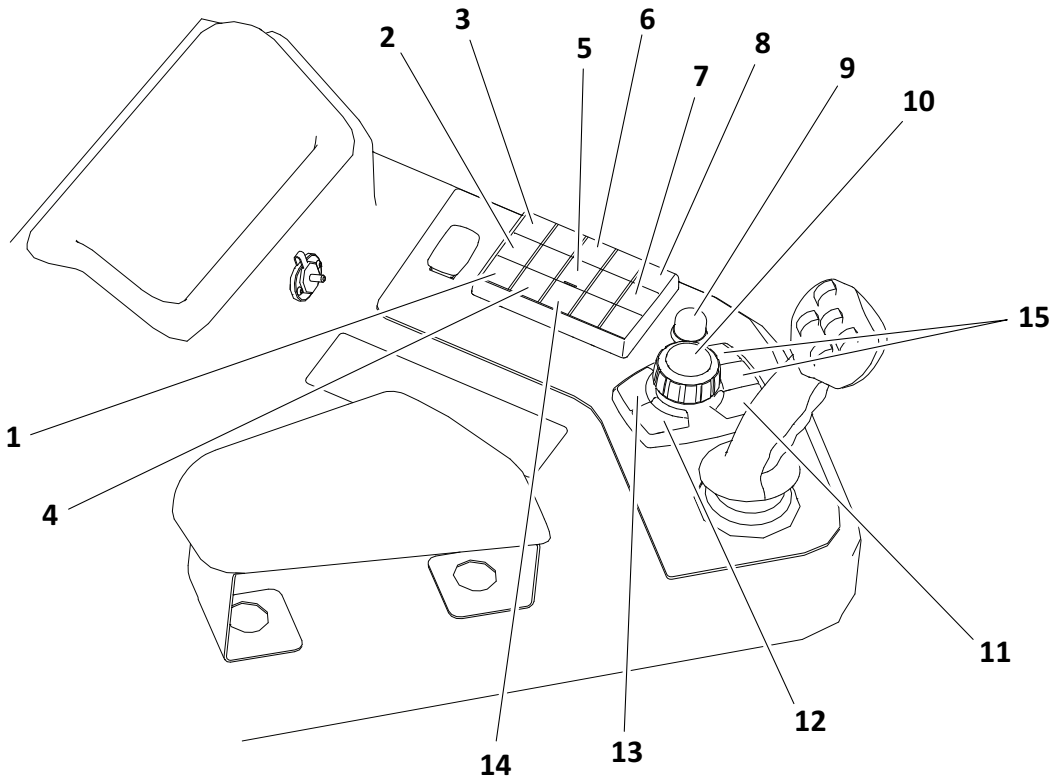

j87om008w21.eps

1. Jog clockwise control (AT only)
2. Manual inner spindle control (AT only)
3. Automated inner spindle control (AT only)
4. Jog counterclockwise control (AT only)
5. Autocarve control
6. Two-speed rotation control
7. Throttle down control
8. Autothrottle control
9. Remote engine start control
10. Rotary operation control
11. Automated inner spindle selector
12. Fluid flow selector
13. Carve window selector
14. Outer spindle brake control* (JT only)
15. Not used

*If equipped

Item	Description	IMPORTANT
1. Jog clockwise control 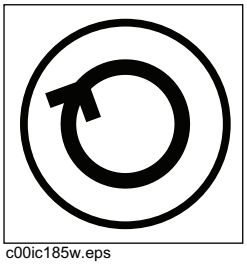 c00ic185w.eps	To turn inner rod clockwise at a fixed speed, press. To stop, press again.	
2. Manual inner spindle control  c00ic184w.eps	To turn on, press. To turn off, press again.	Must be in AT mode. See display manual for more information. Use rotary operation control to control inner rotation. See "Rotary operation control" on page 51. Control must be off to automatically control inner rotation speed and direction.
3. Automated inner spindle control 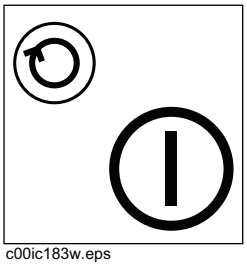 c00ic183w.eps	To turn on, press. To turn off press again.	Must be in AT mode. See display manual for more information. Inner spindle selector must be on. See "Automated inner spindle selector" on page 51. Use rotary operation control to control inner rotation. See "Rotary operation control" on page 51. Control must be off to manually control inner rotation speed and direction.
4. Jog counterclockwise control 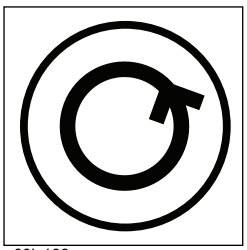 c00ic186w.eps	To turn inner rod counterclockwise at a fixed speed, press. To stop, press again.	

Item	Description	IMPORTANT
5. Autocarve control 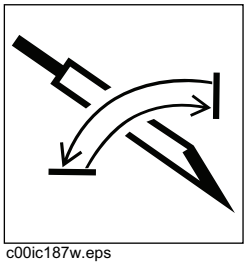 c00ic187w.eps	To enable autocarve, press. To disable, press again.	Carve window selector must be on. See "Carve window selector" on page 52. Use rotary operation control to adjust carve window. See "Rotary operation control" on page 51.
6. Two-speed rotation control 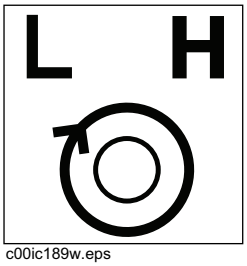 c00ic189w.eps	To rotate in high speed, press. To rotate in low speed, press again.	When using autocarve, multi-use button controls rotation speed.
7. Throttle down control 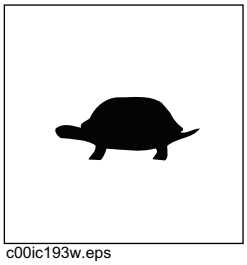 c00ic193w.eps	To decrease engine speed, press.	Engine speed will be decreased incrementally each time control is pressed.
8. Autothrottle control  c00ic192w.eps	To turn on, press. To turn off, press again.	Autothrottle mode slows engine to low throttle after 15 seconds of inactivity. To return to high speed: activate thrust, rotation, drilling fluid, or an add/remove pipe cycle.

Item	Description	IMPORTANT
9. Remote engine start control 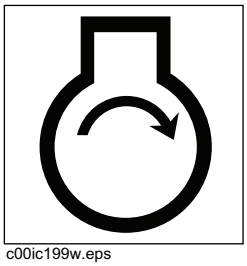 c00ic199w.eps	To start engine from operator station, press.	Works only when key in set-up console is on, operator is in seat, and battery disconnect switch is off. See "Drive" on page 75.
10. Rotary operation control	Turn knob to control the following functions: • manual inner spindle speed • automated inner spindle speed • fluid flow • carve window To increase, move right. To decrease, move left.	Function must be selected before using rotary operation control. Press and turn knob to allow finer control of functions.
11. Automated inner spindle selector 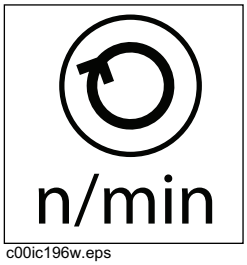 c00ic196w.eps	To turn on, press. To turn off, press again.	Must be in AT mode. See display manual for more information. Automated inner spindle control must be on. See "Automated inner spindle control" on page 49. Use rotary operation control to adjust inner spindle speed. See "Rotary operation control" on page 51.
12. Fluid flow selector 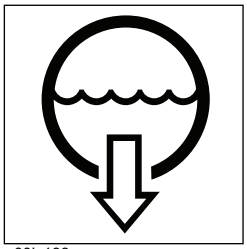 c00ic198w.eps	To enable fluid flow, press. To disable, press again.	Drilling fluid pump must be enabled. See "Drilling fluid pump switch" on page 60. Use rotary operation control to adjust fluid flow. See "Rotary operation control" on page 51.

Item	Description	IMPORTANT
13. Carve window selector 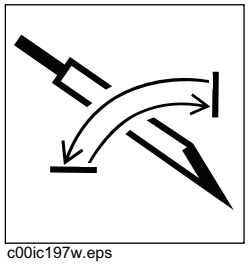 c00ic197w.eps	To enable carve window, press. To disable, press again.	Must be in AT mode. See display manual for more information. Autocarve control must be on. See "Autocarve control" on page 50. Use rotary operation control to adjust carve window. See "Rotary operation control" on page 51.
14. Outer spindle brake control 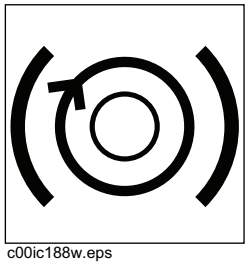 c00ic188w.eps	To set, press. To release, press again.	Prevents outer spindle from rotating when inner spindle or drilling fluid motor are in use. Brake is temporarily released when front wrench is clamped to allow pipe change.
15. Not used		

Miscellaneous

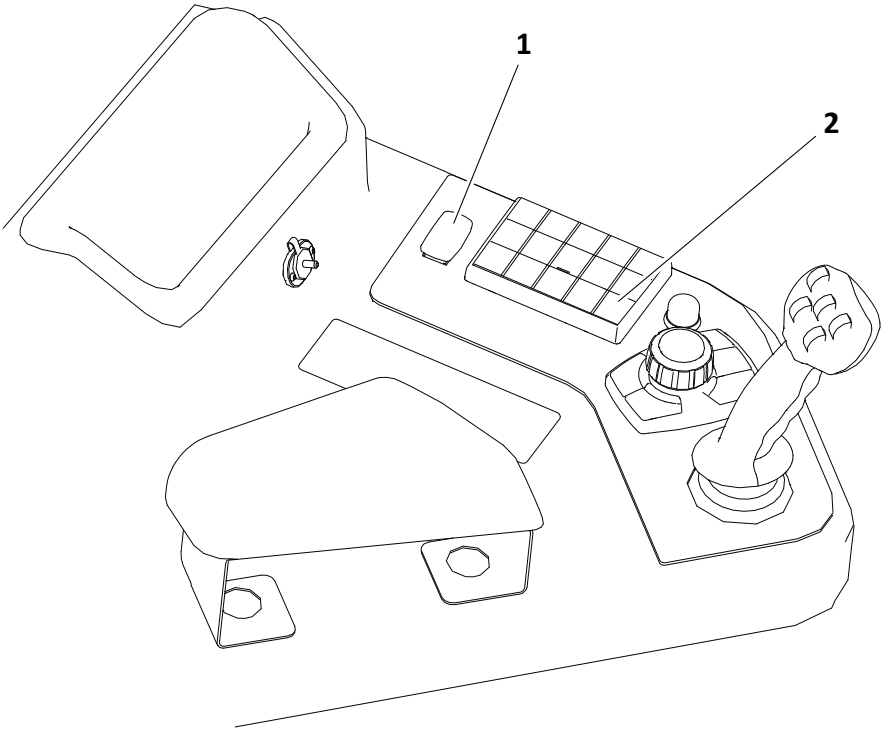

j87om009w21.eps

Item	Description	IMPORTANT
1. ESID alarm interrupt/ self-test switch 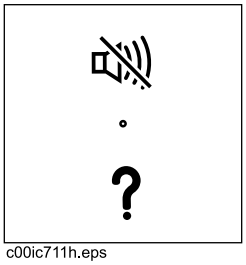 c00ic711h.eps	To turn off strike alarm at drill, press top. To start manual self-test, press bottom. To reset system after a strike has been detected, press bottom.	Self-test checks all systems and circuits except voltage limiter. See "If an Electric Line is Damaged" on page 17.
2. Horn 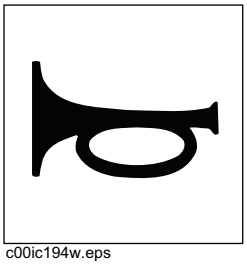 c00ic194w.eps	To sound horn, press and hold.	

Pipe Loading

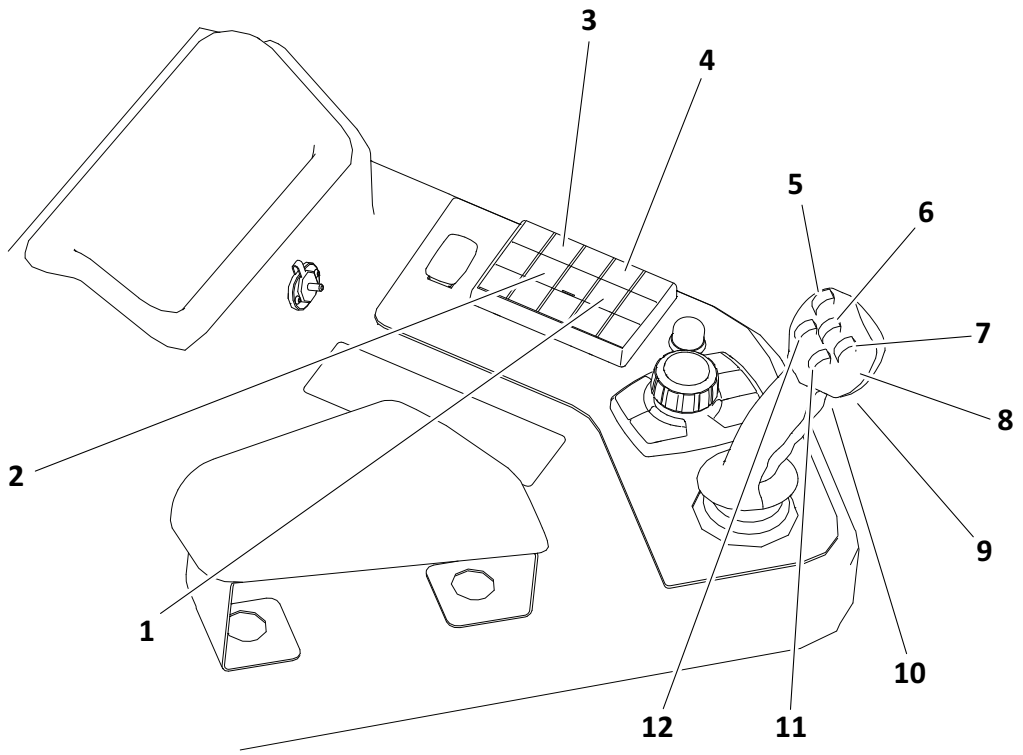

j87om010w21.eps

IMPORTANT: Joystick controls shown are Ditch Witch mode controls. For other control configurations, see display.

1. Remove pipe control
2. Select previous row control
3. Select next row control
4. Add pipe control
5. Pipe gripper switch
6. Pipe shuttle switch
7. Pipe lift switch
8. Left joystick/Wrench control
9. Display left joystick map switch
10. Pipe lubricator switch
11. Set/Resume switch
12. Rear wrench rotation switch

Item	Description	IMPORTANT
1. Remove pipe control 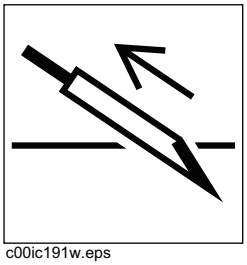 c00ic191w.eps	To enable automated remove pipe function, press. To enable manual pipe loader controls, press again.	See "Enable Automated Pipe Loader System" on page 97.
2. Select previous row control 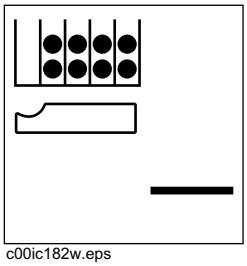 c00ic182w.eps	To move shuttle to previous row in pipe box, press.	See "Row Select" on page 142.
3. Select next row control 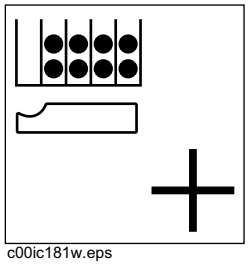 c00ic181w.eps	To move shuttle to next row in pipe box, press.	See "Row Select" on page 142.
4. Add pipe control 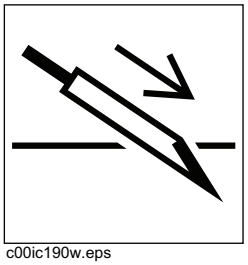 c00ic190w.eps	To enable automated add pipe function, press. To enable manual pipe loader controls, press again.	See "Enable Automated Pipe Loader System" on page 97.

Item	Description	IMPORTANT
5. Pipe gripper switch 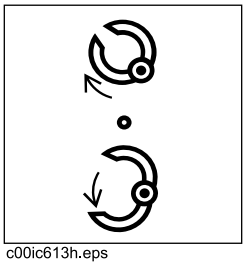 c00ic613h.eps	To close, press top. To open, press bottom.	
6. Pipe shuttle switch 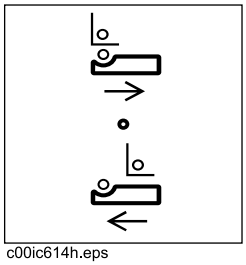 c00ic614h.eps	To move toward pipe box (retract), press top. To move toward spindle (extend), press bottom.	
7. Pipe lift switch 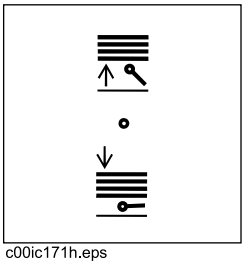 c00ic171h.eps	To raise, press top. To lower, press bottom.	
8. Left joystick/Wrench control 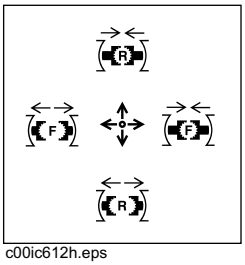 c00ic612h.eps	To clamp rear wrench, push forward. To unclamp rear wrench, pull back. To clamp front wrench, move to right. To unclamp front wrench, move to left.	
9. Display left joystick map	To display left joystick map, press.	

Item	Description	IMPORTANT
10. Pipe lubricator switch 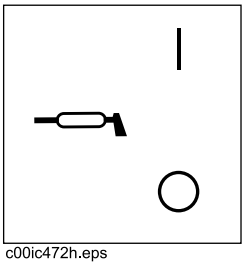 c00ic472h.eps	To apply tool joint compound, press.	
11. Set/Resume switch 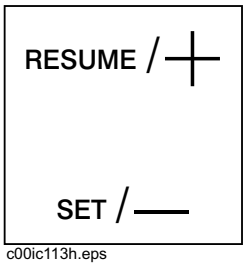 c00ic113h.eps	To resume operation or increase operation levels, press top. To set operating conditions or reduce operation levels, press bottom.	See "Cruise Control" on page 122. See "Use Autocarve Mode" on page 105. See "Pipe Loader" on page 139.
12. Rear wrench rotation switch 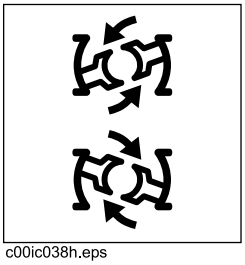 c00ic038h.eps	To rotate counterclockwise, press top. To rotate clockwise, press bottom.	

Console, Right

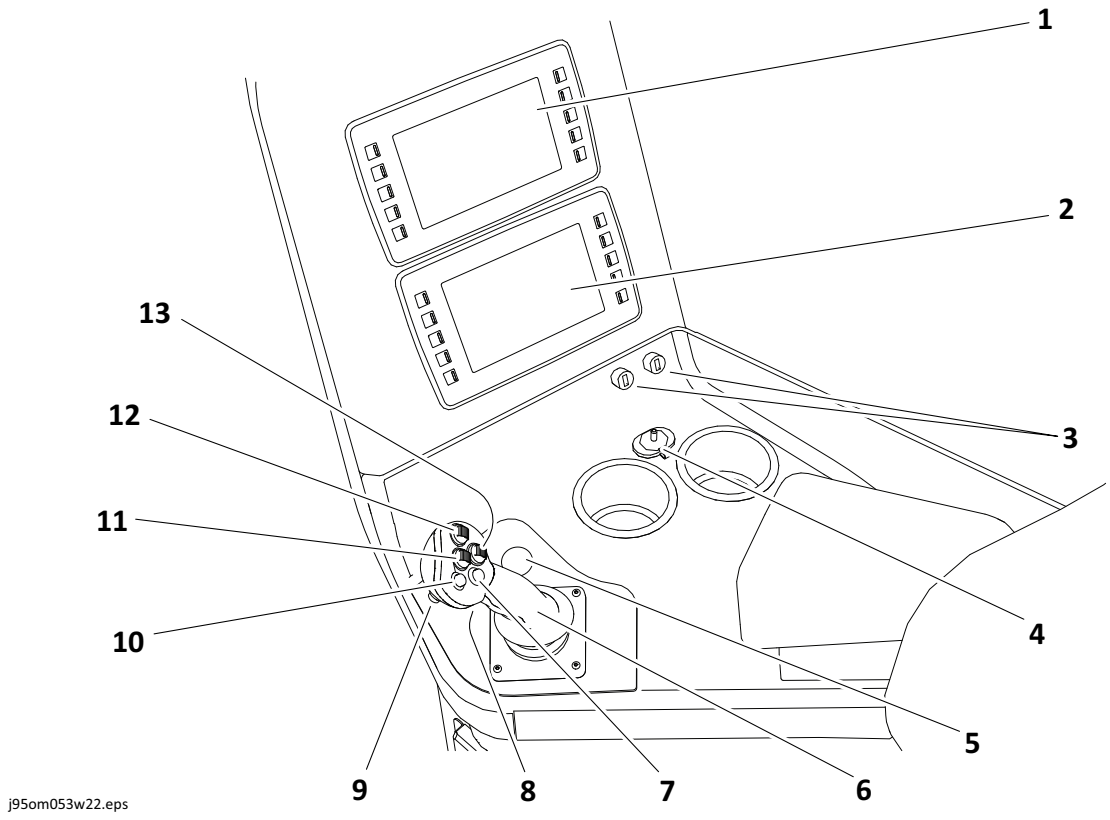

IMPORTANT: Joystick controls shown are Ditch Witch mode controls. For other control configurations, see display.

1. Upper display
2. Lower/Remote* display
3. USB port
4. Auxiliary outlet
5. Remote engine stop switch
6. Rotation/Thrust control
7. Drilling fluid quick-fill switch
8. Two-speed carriage control
9. Display right joystick map
10. Drilling fluid pump switch
11. Not used
12. Not used
13. Not used

*If equipped.

Item	Description	IMPORTANT
1. Upper display	Displays graphic symbols for indicators and conditions.	See display manual for more information.

Item	Description	IMPORTANT
2. Lower/Remote display	Displays graphic symbols for indicators and conditions.	See display manual for more information. If using a Subsite tracking system, information from the tracker is also displayed. See tracking system operator's manual for more information.
3. USB port	Provides power for mobile devices.	Power output is 5VDC, 1A.
4. Auxiliary outlet 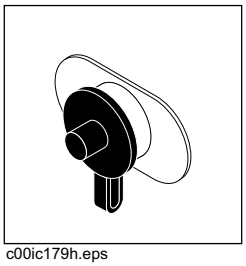 c00ic179h.eps	Provides power for other equipment.	Power output is 12VDC, 5A.
5. Remote engine stop switch 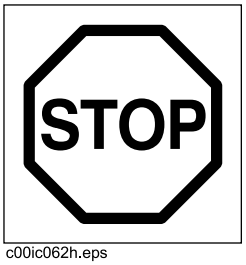 c00ic062h.eps	To stop engine, press.	If used to stop machine, ensure ignition switch is in the off position. If wrenches are clamped when remote engine stop is pressed, wrenches could gradually unclamp.

Item	Description	IMPORTANT
6. Rotation/Thrust control 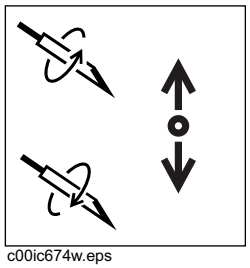 c00ic674w.eps 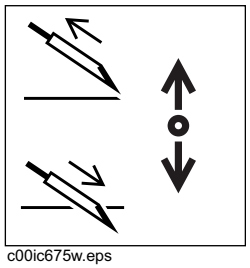 c00ic675w.eps	To rotate spindle counterclockwise (breakout), move left. To rotate spindle clockwise (make up), move right. To move carriage forward (thrust), push. To move carriage backward (pull back), pull.	
7. Drilling fluid quick-fill switch 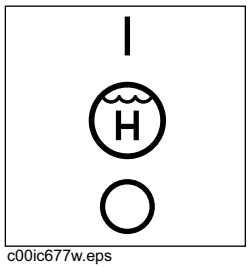 c00ic677w.eps	To fill pipe with fluid, press and hold. To return fluid to flow control setting, release.	Overrides fluid control setting for full pump flow. Also overrides temporary fluid shutdown when front wrench is clamped.
8. Two-speed carriage control	To thrust in high speed, press and hold. To return to regular speed, release.	
9. Display right joystick map	To display right joystick map, press.	
10. Drilling fluid pump switch 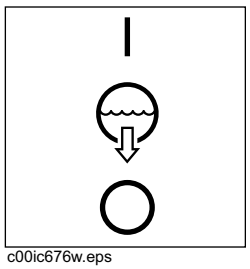 c00ic676w.eps	To turn on, press. To turn off, press again.	Use rotary operation control to control drilling fluid flow. See "Rotary operation control" on page 51. Drilling fluid pump switch and fluid flow selector must be on before using rotary operation control to control drilling fluid control. See "Fluid flow selector" on page 51.

Item	Description	IMPORTANT
11. Not used		
12. Not used		
13. Not used		

Console, Set-Up

Controls

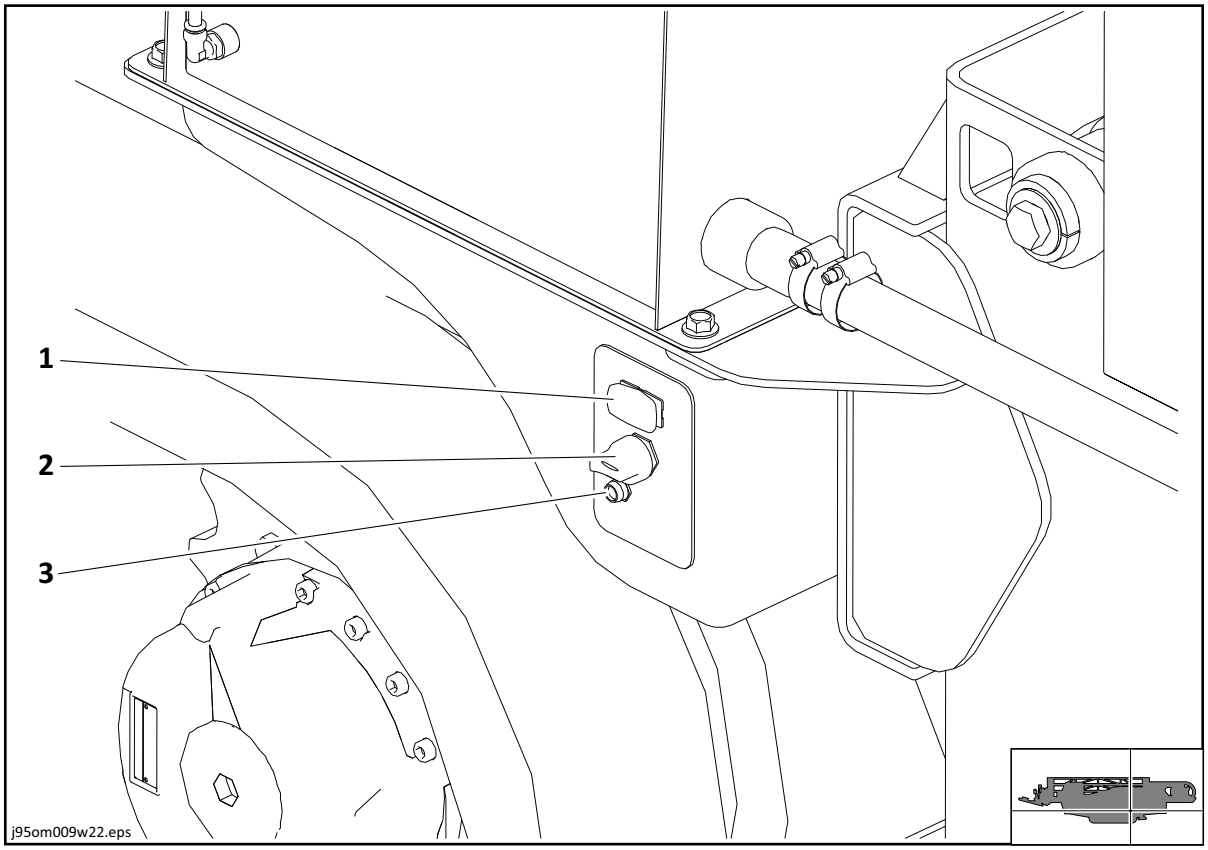

1. Engine shutdown override switch
2. Ignition switch
3. Cold start wait indicator

Item	Description	IMPORTANT
1. Engine shutdown override switch 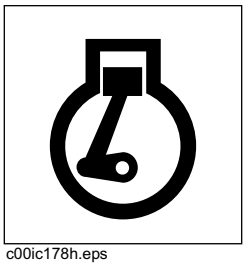 c00ic178h.eps	If engine shutdown indicator lights, press to delay engine shutdown for 30 seconds.	***NOTICE:*** After 30 seconds, engine will shut down unless fault condition has been corrected. See "Electronic Controlled Engine Overview" on page 124.

Item	Description	IMPORTANT
2. Ignition switch 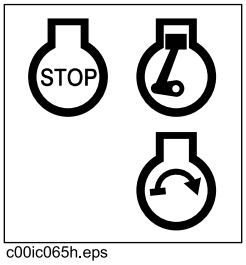 c00ic065h.eps	To activate accessories, turn right. To start engine, turn right and hold. To shut off machine, turn left.	If wrenches are clamped when machine is turned off, wrenches will unclamp and then clamp when engine is started. See "Drive" on page 75.
3. Cold start wait indicator 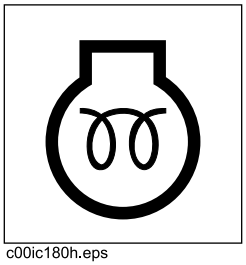 c00ic180h.eps	Lights when intake air-preheater is operating.	See "Start" on page 76.

Wireless Remote Control

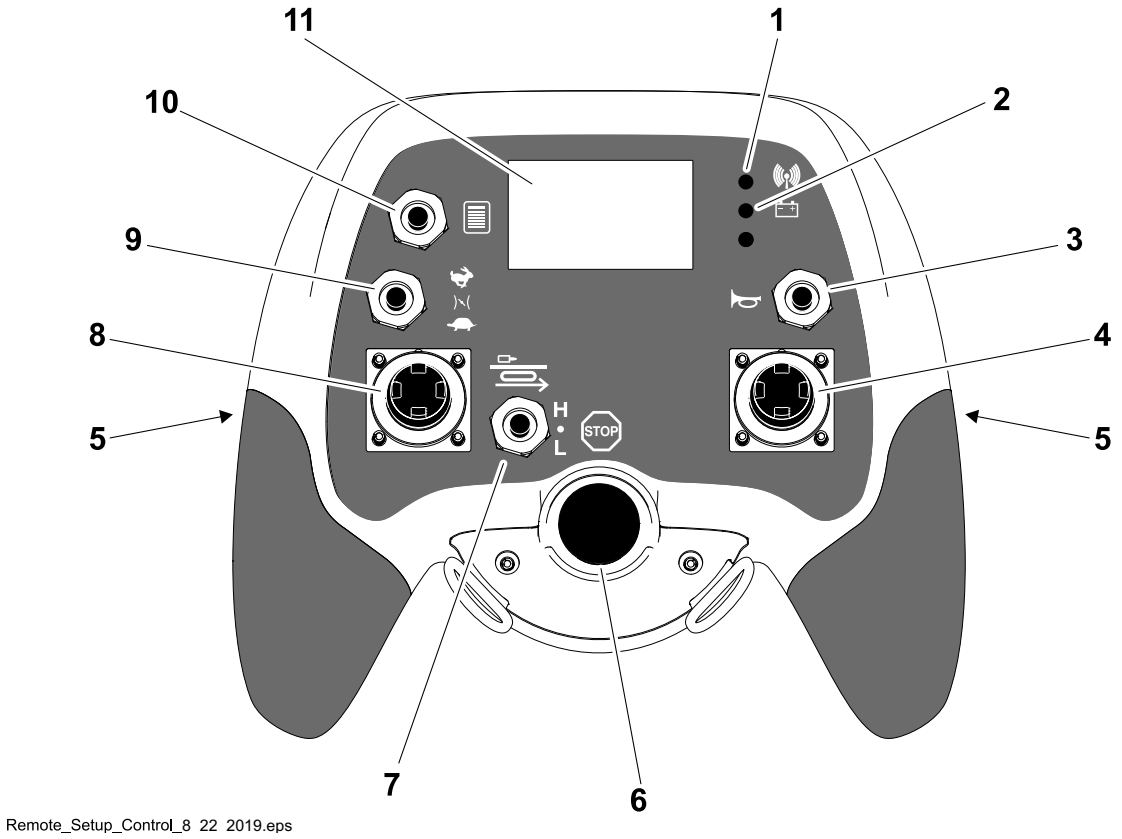

IMPORTANT:

- Operator station must be empty to operate wireless remote control.
- Wireless remote control should be paired to receiver at factory. See "Pair" on page 146.

1. Communication link indicator
2. Power status indicator
3. Power/Enable/Horn switch
4. Right multifunction joystick
5. Operator presence switch
6. Engine stop
7. Drive mode switch
8. Left multifunction joystick
9. Throttle switch
10. Ground drive mode select switch
11. LCD display

Item	Description	IMPORTANT
1. Communication link indicator 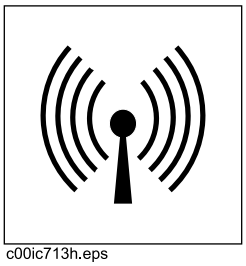 c00ic713h.eps	Indicates status of communication link between wireless remote control and machine.	An active communication link is required to operate wireless remote control. • Flashing yellow indicates no communication link. • Flashing green indicates good communication link. • Steady red indicates an internal problem. Contact your Ditch Witch dealer.
2. Power status indicator 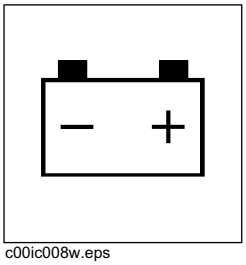 c00ic008w.eps	Indicates battery status and cable connection.	Off indicates good battery level. Flashing red indicates low battery level. Solid green indicates transmitter is connected to and powered by machine.
3. Power/Enable/Horn switch 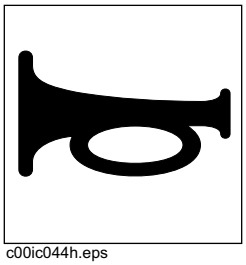 c00ic044h.eps	To turn power on, move up and hold until communication link indicator lights yellow and then flashes green. To start operation, move up and hold until horn sounds. To use horn, move up. To turn power off, move down until indicator turns off.	Wireless remote control indicator (page 4) will light. Ensure left and right multifunction joysticks are in neutral position. Must be moved up after changing modes to enable new function. See "Ground drive mode select switch" on page 66. Wireless remote control turns off and communication link indicator flashes after one minute of inactivity. Move up twice to restart.
4. Right multifunction joystick	To control selected system, move.	See "Multifunction Joystick Control Modes" on page 67.

Item	Description	IMPORTANT
5. Operator presence switch 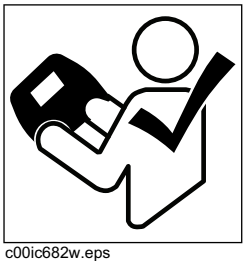 c00ic682w.eps	To operate wireless remote control, press one or both switches.	Must be released and pressed again after changing modes to enable new function. See "Ground drive mode select switch" on page 66.
6. Engine stop 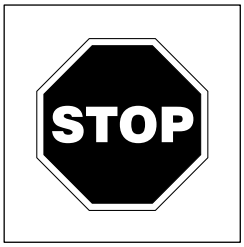 c00ic085c.eps	To stop engine, press.	Ignition switch must be turned off before restarting engine.
7. Drive mode switch 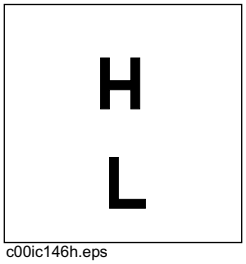 c00ic146h.eps	To select normal driving mode (high), move up. To select transport mode (low), move down.	Use transport mode when loading and unloading machine.
8. Left multifunction joystick	To control selected system, move.	See "Multifunction Joystick Control Modes" on page 67.
9. Throttle switch 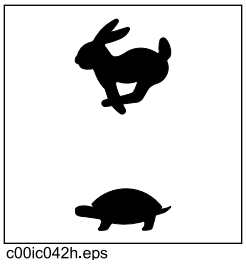 c00ic042h.eps	To increase engine speed, move up. To decrease, move down.	
10. Ground drive mode select switch	To move up through modes, move up. To move down through modes, move down.	Enable switch must be pressed after changing modes to enable new function.

Item	Description	IMPORTANT
11. LCD display	Displays selected mode of operation.	

Multifunction Joystick Control Modes

The multifunction joystick controls can be used to control multiple systems by selecting various modes.

IMPORTANT: To switch between modes, see "Ground drive mode select switch" on page 64.

Left Multifunction Joystick Modes

Item	Description	IMPORTANT
Dual joystick ground drive control 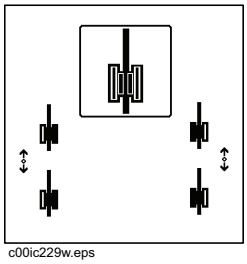 c00ic229w.eps	To move right track forward, move up. To move in reverse, move down.	Operator presence switch(es) must be pressed and operator seat must be empty for control to work. See "Steer" on page 77.
Left stabilizer control 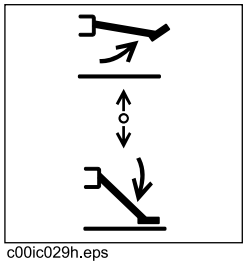 c00ic029h.eps	To raise, move up. To lower, move down.	Lower left and right stabilizers to the ground together, then adjust individually.
Front frame tilt control 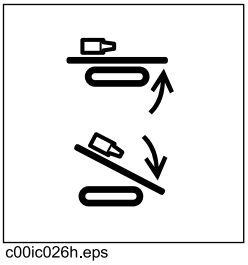 c00ic026h.eps	To raise, move up. To lower, move down.	To ensure a stable platform for drilling, use front and back tilt controls together to set frame as desired without raising tracks off ground.

Item	Description	IMPORTANT
Dual joystick left anchor control 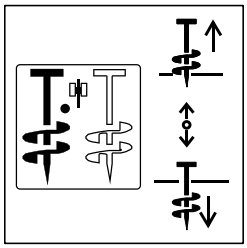 c00ic209w.eps	To drive, move down. To remove, move up.	
Dual joystick right anchor control 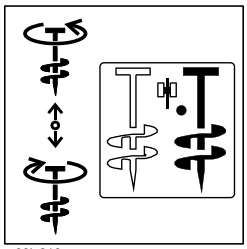 c00ic210w.eps	To drive, move down. To remove, move up.	

Right Multifunction Joystick Modes

Item	Description	IMPORTANT
Single joystick ground drive control 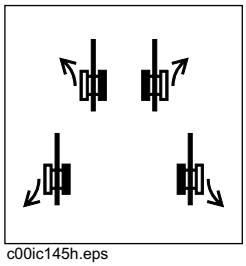 c00ic145h.eps	To move tracks forward, move up. To move in reverse, move down. To steer, move left or right.	Operator presence switch(es) must be pressed and operator seat must be empty for control to work. See "Steer" on page 77.
Right stabilizer control 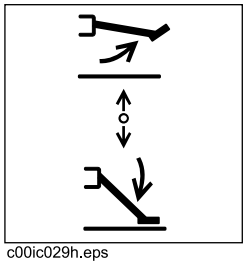 c00ic029h.eps	To raise, push up. To lower, pull down.	Lower left and right stabilizers to the ground together, then adjust individually.
Back frame tilt control 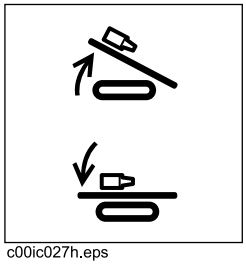 c00ic027h.eps	To raise, push up. To lower, push down.	To ensure a stable platform for drilling, use front and back tilt controls together to set frame as desired without raising tracks off ground.
Operation station slide control 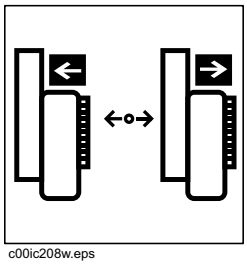 c00ic208w.eps	To move toward drill, press left. To move away from drill, press right.	Drill icon will appear when operator station is in correct position for drilling.

Item	Description	IMPORTANT
Dual joystick left anchor control 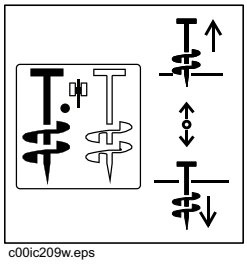 c00ic209w.eps	To raise, move up. To lower, move down.	
Dual joystick right anchor control 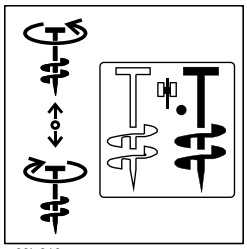 c00ic210w.eps	To raise, move up. To lower, move down.	
Dual joystick ground drive control 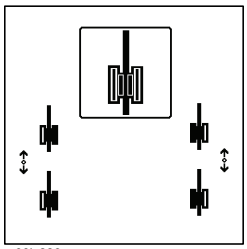 c00ic229w.eps	To move right track forward, move up. To move in reverse, move down.	Operator presence switch(es) must be pressed and operator seat must be empty for control to work. See "Steer" on page 77.

Engine Compartment

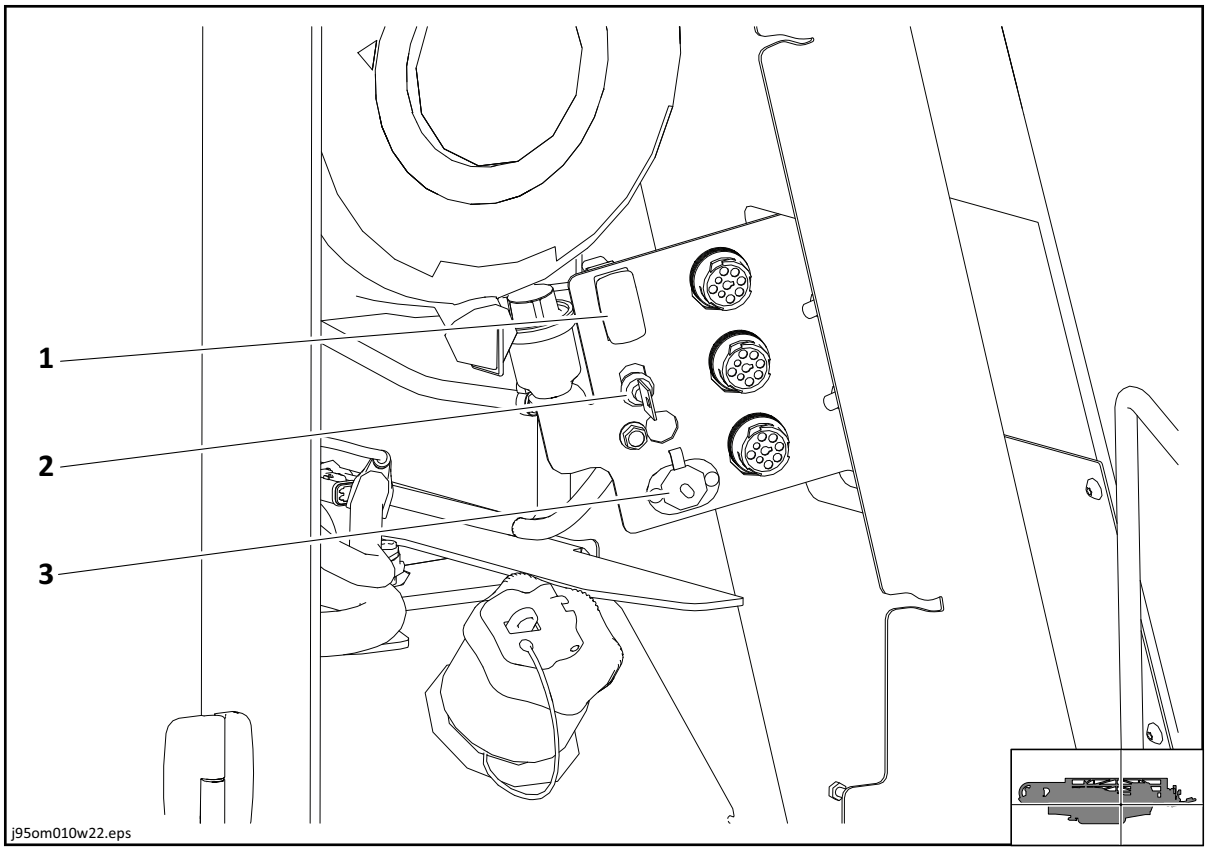

1. Throttle switch
2. DrillLok key
3. Auxiliary outlet

Item	Description	IMPORTANT
1. Throttle switch 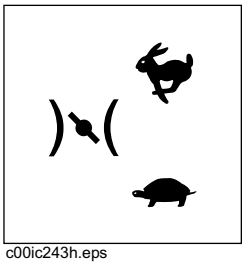 c00ic243h.eps	To increase engine speed, press top. To decrease engine speed, press bottom.	Use this switch only if throttle switch on console does not work.

Item	Description	IMPORTANT
2. DrillLok key 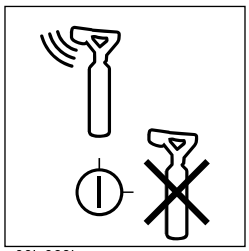 c00ic063h.eps 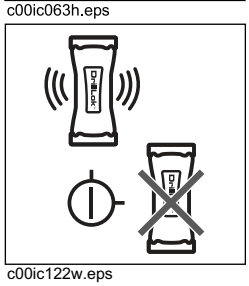 c00ic122w.eps	To allow tracker operator to stop thrust and rotation, turn key left. To override DrillLok mode, turn key right.	Top icon is shown when operating with Subsite tracker. Bottom icon is shown when operating without Subsite tracker. Remove key and keep in tracker operator's possession.
3. Auxiliary outlet	Provides power for other equipment	12VDC, 5A

Wash Wand Controls

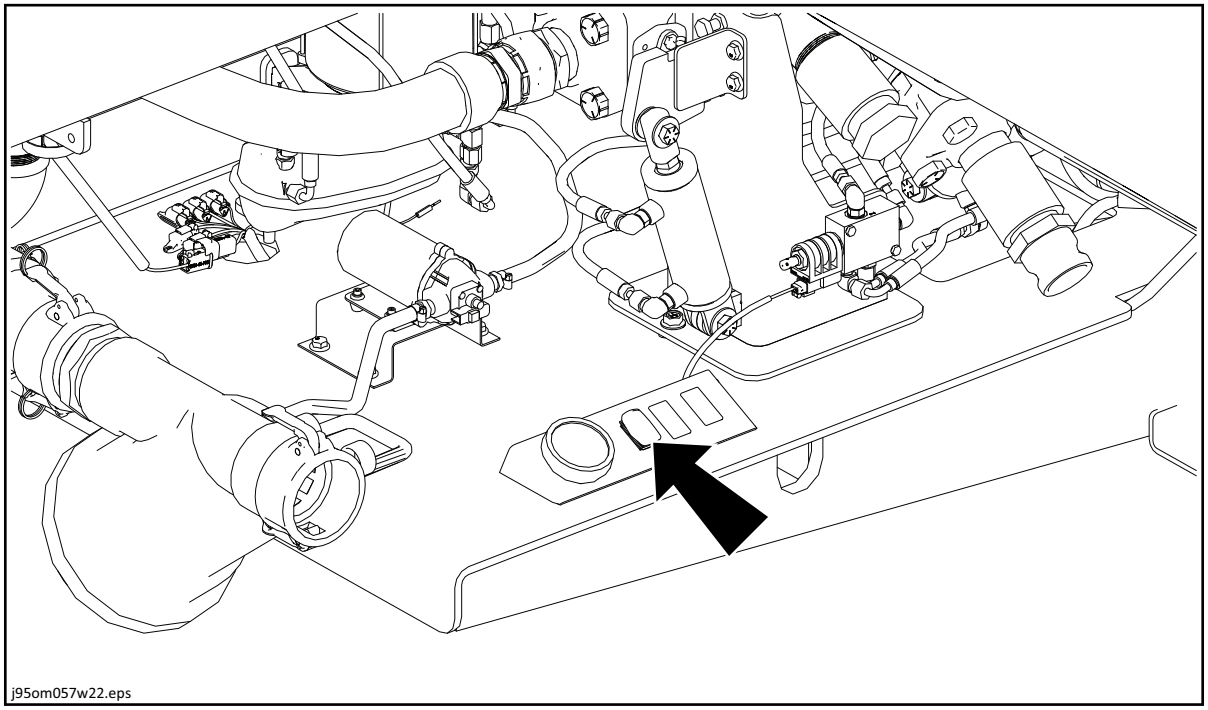

Item	Description	IMPORTANT
Wash wand switch 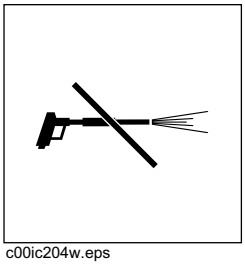 c00ic204w.eps	To turn wash wand on, press top. To turn off, press bottom.	

Wireline Restricted Operating Mode (ROM)

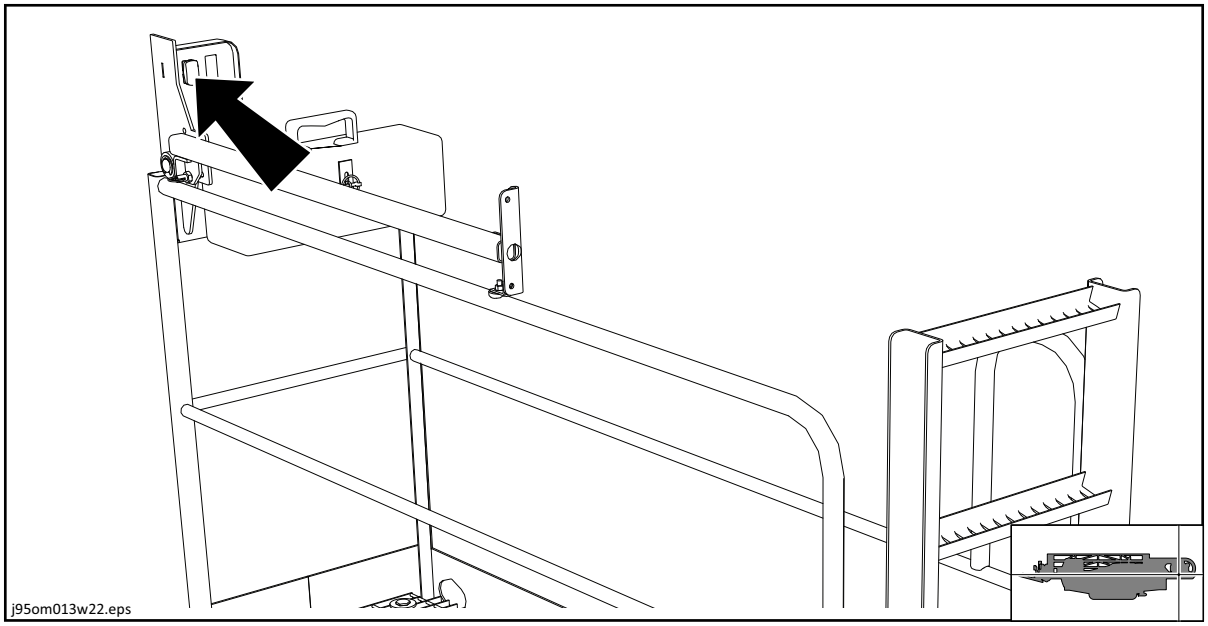

IMPORTANT: For more information about optional wireline, see "Wireline Operation" on page 147.

Item	Description	IMPORTANT
ROM switch 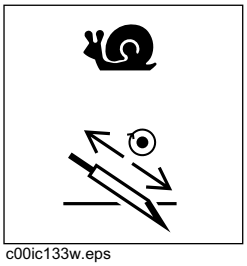 c00ic133w.eps	To enable wireline restricted operating mode, press top of switch. To disable, press bottom of switch.	Indicator will light when wireline restricted operating mode is on. See display manual for more information.

Drive

Chapter Contents



For additional precautions, see "Safety Awareness" and "Prepare" chapters.

IMPORTANT: For more information on how to operate controls, see "Controls" chapter.

Start 76

Steer 77

- Slope Guidelines 78
- Reduce Track Wear 79

Shut Down 79

Start

EMERGENCY SHUTDOWN: Turn ignition switch off or press remote engine stop button (if equipped).


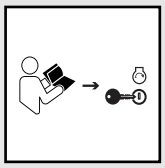

WARNING Misuse of machine can cause death or serious injury. Read and understand operator's manual and all other safety instructions before use. Know how to use all controls.

To help avoid injury:

- Allow hydraulic fluid time to warm before operating in cold weather. Cold hydraulic fluid can lengthen ground drive stopping time.
- For starting in extreme temperatures, contact your Ditch Witch dealer.




WARNING Pre-heater. Fire or explosion can cause death or serious injury. Never use starter fluid.

NOTICE: If engine turns but does not start within 30 seconds, engine ECU will prevent starting to allow starter to cool. Wait at least two minutes and try again.

1. Ensure all controls are in neutral.
2. Insert key and activate accessories using ignition switch.
3. **If starting machine in normal conditions,** start engine and run at low throttle under light load for at least three minutes before applying heavier load.

   If starting machine in cold weather:

   1. When cold start wait indicator turns off, start engine.
   2. Warm engine and hydraulic fluid by gradually increasing engine speed for up to 30 minutes.
   3. After warmup, carefully operate all hydraulic controls at low throttle until controls operate as described in controls chapter.

Steer

NOTICE:

- Drive carefully in congested areas. Know machine's clearance and turning radius.
- Survey field of vision when operating machine.
- Machine will drive at reduced speed with upper pipe box installed.

Use wireless remote control or tethered ground drive controller to steer machine using either single joystick ground drive mode or dual joystick ground drive mode.

Single Joystick Ground Drive

Ref.	Direction
	Forward
	Forward to the right
	Clockwise counter rotation to the right
	Counterclockwise counter rotation to the right
	Reverse to the right
	Reverse
	Reverse to the left
	Clockwise counter rotation to the left
	Counterclockwise counter rotation to the left
	Forward to the left

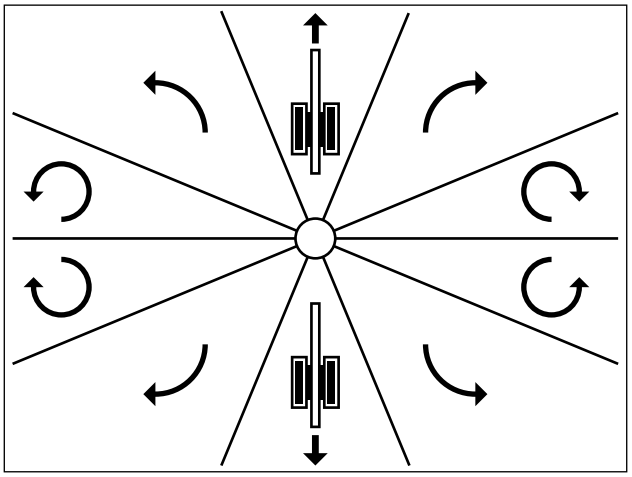

SteeringJoystick.eps

Dual Joystick Ground Drive

To steer while moving forward or in reverse, move one joystick slightly more than the other to turn in desired direction. Machine will gradually turn.

For tight steering at low speed, pull one joystick and push the other to turn in desired direction. Tracks will counter-rotate and machine will turn in a tight circle.

Slope Guidelines

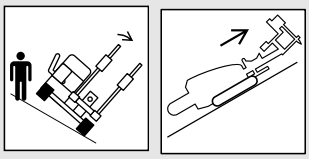

WARNING Tipover. Crushing can cause death or serious injury. Follow procedure in operator's manual. Drive cautiously.

To help avoid injury:

- Operate at slow speed when on rough terrain.
- Avoid driving across slopes.
- Never jerk control levers. Use a steady, even motion.
- Always operate from the uphill side of the machine.

Operating safely on a slope depends upon many factors including:

- distribution of machine weight (can change due to configuration)
- height of load
- even or rough ground conditions
- potential for ground giving way causing unplanned tilt forward, reverse or sideways
- nearness of ditches, ruts, stumps or other obstructions and sudden changes in slope
- speed
- turning
- braking performance
- operator skill

Reduce Track Wear

Rubber tracks are best suited at soil-based jobsites with minimal rocks and debris. To reduce track wear drive slowly and make wide turns. Avoid the following:

- spinning tracks under heavy load
- turning on sharp objects such as stones, broken concrete, or debris
- quick turns on asphalt or concrete
- driving over curbs or ledges
- driving with track edges pressed against hard walls or curbs
- operating on corrosive materials such as salt or fertilizer

Shut Down

1. When job is complete, move machine to level ground.
2. Stop machine movement.
3. Lower stabilizers to ground.
4. Lower drill frame to ground.
5. Return all controls to neutral.
6. Run engine at low throttle with no load for at least three minutes to cool.
7. Shut off machine.
8. If leaving machine unattended, remove key.
9. For maintenance or long-term storage, disconnect battery using battery disconnect switch.

> ***NOTICE:*** Wait two minutes after shutting off machine before disconnecting battery.

Transport

Chapter Contents



For additional precautions, see "Safety Awareness" and "Prepare" chapters.

IMPORTANT: For more information on how to operate controls, see "Controls" chapter.

Lift 82

- Points 82
- Procedure 82

Haul 83

- Inspect Trailer 84
- Load 84
- Tie Down 85
- Unload 85

Retrieve 86

Lift

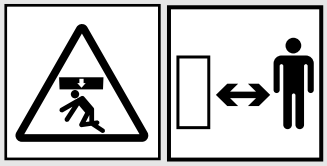

WARNING Lifted load. Crushing weight can cause death or serious injury. Stay away from lifted load and its range of movement.

Points

Lifting points are identified by lifting decals. Lifting at other points is unsafe and can damage machinery.

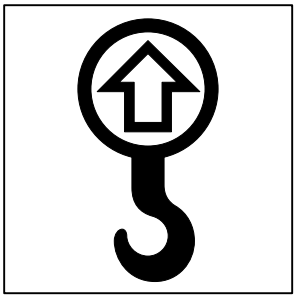
ic1319a.eps

Procedure

This machine is not configured for lifting. If the machine must be lifted, load machine into a container or onto a platform appropriate for lifting. See "Specifications" on page 193 for machine weight.

IMPORTANT: For pipe box lifting procedures, see See "Remove/Install Pipe Box" on page 140.

Anchor Plate

Use equipment capable of supporting the plate's size and weight. See "Specifications" on page 193 or measure and weigh plate before lifting.

Use lift points shown.

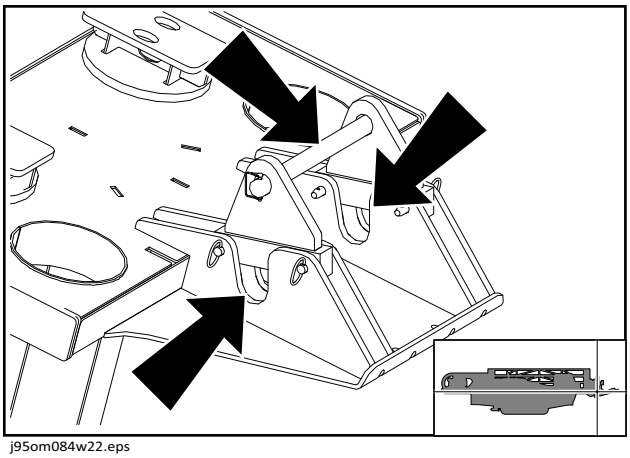
j95om084w22.eps

Haul

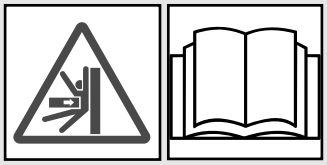

WARNING Horizontal movement. Crushing can cause death or serious injury. Read and understand operator's manual and all safety instructions before use.

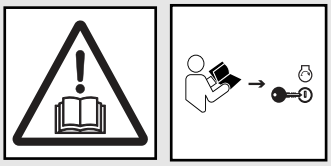

WARNING Misuse of machine can cause death or serious injury. Read and understand operator's manual and all other safety instructions before use. Know how to use all controls.

To help avoid injury:

- Read trailer operator's manual before loading or transporting machine.
- This machine must be transported on a flat truck or trailer.
- Ensure tow vehicle has proper tow capacity rating.
- Incorrect loading can cause trailer swaying.
- Attach trailer to vehicle before loading or unloading.
- Load and unload trailer on level ground.
- To help prevent trailer sway, load trailer so that 10-15 percent of total vehicle weight (equipment plus trailer) is on tongue.

NOTICE: Ensure that any downhole tool or pipe in wrenches is attached to spindle or removed before transport. Wrenches can unclamp after engine shutdown.

Inspect Trailer

- Check hitch for wear and cracks.
- Check battery for 12V charge.
- Inspect lights for cleanliness and correct operation.
- Inspect reflectors and replace if needed.
- Check tire pressure.
- Check lug nut torque.
- Ensure trailer brakes are adjusted to come on with tow vehicle brakes.
- Check trailer bed for cracks.
- If the drill exceeds overall dimensions allowed, it must be flagged according to the highway laws of the region involved in the transport.
- The transporter is responsible for using the proper method of transport and following all other applicable regulations.

Load

1. Start engine.
2. Ensure transport mode is selected.
3. Move carriage to transport position.
4. Move machine to rear of trailer and align with ramps.
5. Drive forward slowly in low throttle to move machine onto trailer until tiedown position is reached.
6. Move carriage to transport position.
7. Lower drill frame to trailer floor.

   NOTICE: Extending rear cylinders may cause interference of carriage and cab in transport position.

8. Lower stabilizers to trailer floor.
9. Turn off machine.
10. Tie down machine. See "Tie Down" on page 85.
11. Ensure all covers are properly secured.

Tie Down

Points

Tiedown points are identified by tiedown decals. Securing to truck or trailer at other points is unsafe and can damage machinery.

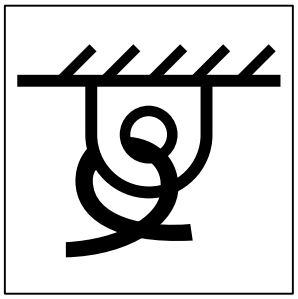
ic1320a.eps

Procedure

NOTICE: Use minimum Grade 7, 1/2" (1.27 cm) transport chain to secure machine to trailer.

Loop a transport chain around each tie down point. Ensure tiedowns are tight before transporting.

Unload

1. Prepare trailer and ramps for unloading.
2. Remove tiedowns.
3. Start engine.
4. Ensure transport mode is selected.
5. Raise stabilizers.
6. Raise drill frame.
7. Set throttle to low.
8. Slowly back machine down trailer or ramps.

Retrieve

Under normal conditions, machine should not be towed. If machine becomes disabled and retrieval is necessary:

- Tow for short distances at less than 1 mph (1.6k m/h).
- Use maximum towing force of 1.5 times machine weight.
- Use towing chains appropriately rated for maximum towing force.

1. Block tracks.
2. Loop chain through each tow point (1) and bring together to central pull point (2) facing towing vehicle.

   NOTICE: Arrange chains so angle (A) is less than 120°.

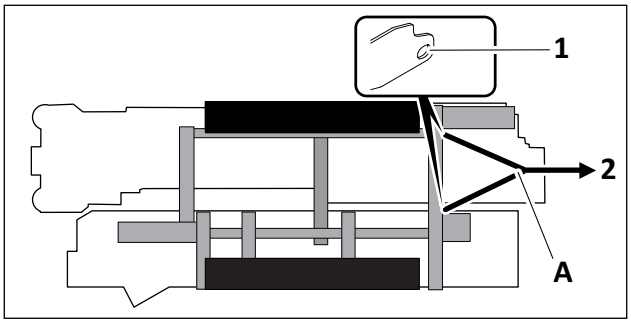

j87om016w21.eps

3. Remove cover plate.
4. Install bolt.
5. Use bolt to remove gear from gearbox.

   NOTICE: Keep the gear straight as it is removed.

6. Remove blocks.
7. After towing, replace gear, remove bolt, and install cover plates

Conduct a Bore

Chapter Contents



For additional precautions, see "Safety Awareness" and "Prepare" chapters.

IMPORTANT: For more information on how to operate controls, see "Controls" chapter.

Position Equipment 89

Connect Fluid System 89

- Blow Down Valve 89

Start System 90

Prime Fluid Pump 90

Operate Carriage Control 91

Clamp Pipe 92

Assemble Drill String 93

- Prepare Beacon Housing 93
- Use Direct Connect Method 94
- Use EZ Connect Method 94
- Connect Drill Pipe to Downhole Tool 95

Drill First Pipe 96

Swab the Hole 97

Use Automated Pipe Loader System 97

Add Pipe 98

- AT Mode 98
- JT Mode 100

Correct Direction 102

- Basic Rules 102
- Procedure 103
- Drill Head Position 104

Use Autocarve Mode 105

Record Bore Path 106

Surface Drill Head 107

Backream 108

- Assemble Backream String 109
- Begin Backream 109

Remove Pipe 110

- Break Front Joint 110
- Break Rear Joint 110

Remove Pullback Device 111

Position Equipment

1. Move equipment into selected positions. See "Select Start and End Points" on page 24.
2. Adjust drill frame and move cab into position.
3. Lower stabilizers.
4. Connect and test electric strike system. See "Electric Strike System" on page 137.
5. Drive anchors. See "Anchor System" on page 116.
6. Unlatch shuttle guards and lower into position.

Connect Fluid System

NOTICE: Do not connect machine to a public or private water supply.

1. Connect fluid hose from fluid mixer to fluid pump. A 3" (76 mm), non-collapsible hose no longer than 50' (15 m) is required.

   NOTICE: To prevent pump cavitation, hose must provide 30psi (2bar) of continuous pressure at the drilling fluid pump inlet.

2. Install y-strainer between fluid mixer and fluid pump. Position y-strainer so that fluid flows in the direction of the arrow.

   IMPORTANT:

   - In most cases, positioning y-strainer at outlet of fluid mixer gives the best results.
   - Clean y-strainer regularly. See "Drilling Fluid Y-Strainer" on page 169.

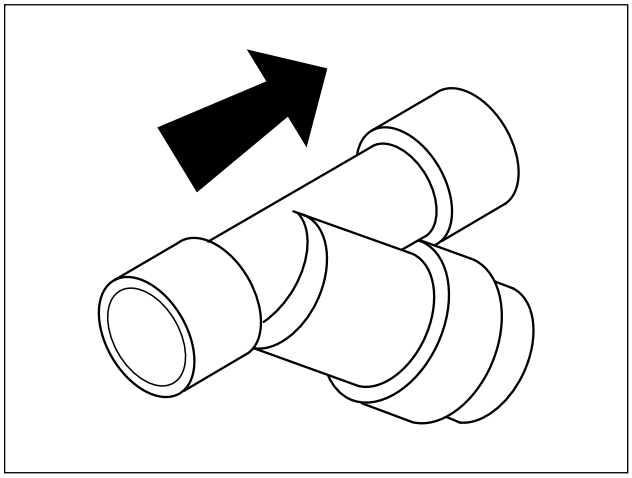
j07om057c.eps

Blow Down Valve

Remove plug before operation. Replace plug for transport.

Start System

EMERGENCY EXIT: If operating machine with cab, push window and exit cab in case of emergency.

1. Start engine.
2. Start fluid mixer.

   IMPORTANT: Ensure mixture of drilling fluid matches drilling conditions. See "Drilling Fluid" on page 133.

3. Enable DrillLok mode, if equipped. See "DrillLok" on page 136.
4. Set to high throttle.
5. Fill pipe with drilling fluid until pressure begins to rise.

Prime Fluid Pump

NOTICE: Failure to prime fluid pump will cause flow fluctuations, which will make it difficult to control the wash wand.

Prime fluid pump each time tank is changed. To prime:

1. Fill drilling fluid hose.
2. Connect hose to machine.
3. Operate mixing/transfer pump on fluid mixer at full speed for 1-3 minutes to discharge air from system.
4. Return mixing/transfer pump on fluid mixer to normal operating speed and continue bore.
5. If drilling fluid pressure surges, repeat step 3.

Operate Carriage Control

IMPORTANT:

- Counterclockwise rotation can unthread pipe in the ground.
- During assisted makeup, carriage control joystick controls only speed and direction of rotation, not thrust. See "Use Drill Pipe Correctly" on page 132.

During drilling and backreaming, the carriage control joystick controls both thrust and rotation and allows any combination of the two based on position of the joystick.

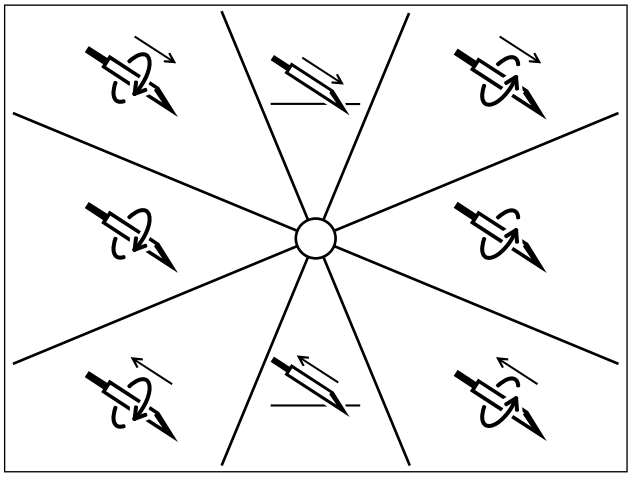

CarriageControlJoystick.eps

Ref.	Description
	Forward thrust with no rotation
	Forward thrust with counterclockwise rotation
	No thrust with counterclockwise rotation
	Reverse thrust with counterclockwise rotation
	Reverse thrust with no rotation
	Reverse thrust with clockwise rotation
	No thrust with clockwise rotation
	Forward thrust with clockwise rotation

Clamp Pipe

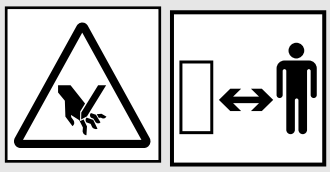

WARNING Moving parts. Contact can cause serious injury. Stay away.

Clamp pipe when joint is between wrenches (1 and 2) as shown.

NOTICE: Clamp only where indicated. Clamping anywhere else on pipe will damage wrenches and/or weaken the pipe. Pipe can later break, even when operating under normal loads.

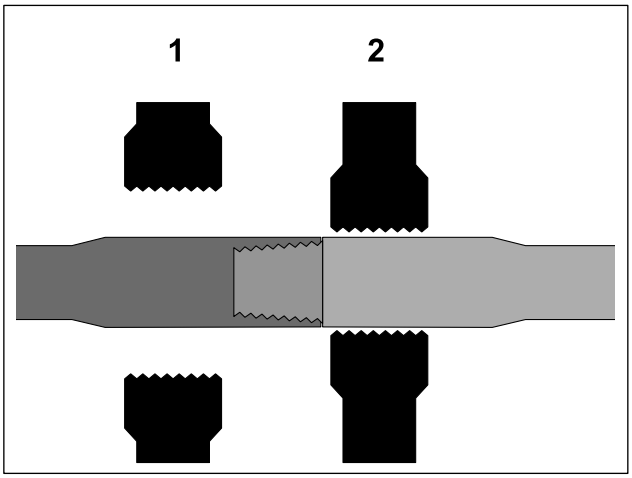

DrillPipe_Clamp.eps

Assemble Drill String



DANGER Moving or thrown tools. Impact will cause death or serious injury. Never use pipe wrenches on drill string. Follow procedure in operator's manual.

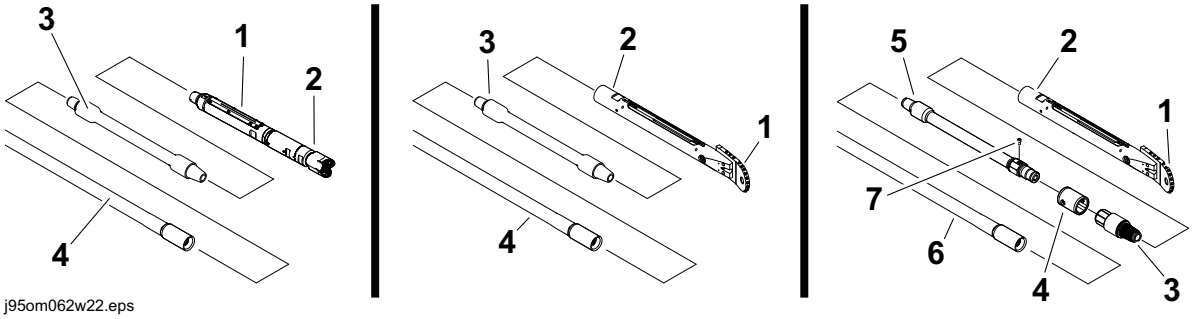

j95om062w22.eps

AT Mode	AT Dirt/JT Mode Direct Connect	AT Dirt/JT Mode EZ Connect
1. Beacon housing	1. Bit	1. Bit
2. Rockmaster® tool	2. Beacon housing	2. Beacon housing
3. Transition sub*	3. Transition sub*	3. Adapter
4. Drill pipe	4. Drill pipe	4. Collar
		5. Transition sub*
		6. Drill pipe
		7. Bolt

*Optional

Prepare Beacon Housing

NOTICE: Beacon must be calibrated after installation in housing. See beacon operator's manual.

IMPORTANT: Nozzle and bit selection depends on job conditions. See page 125 for more information or contact your Ditch Witch dealer.

1. Select nozzle, if needed.
2. Select bit.
3. Attach bit to beacon housing.
4. Ensure Rockmaster tool is properly lubricated (AT only).

5. Install beacon. See beacon operator's manual.
6. Install beacon housing lid.

Use Direct Connect Method

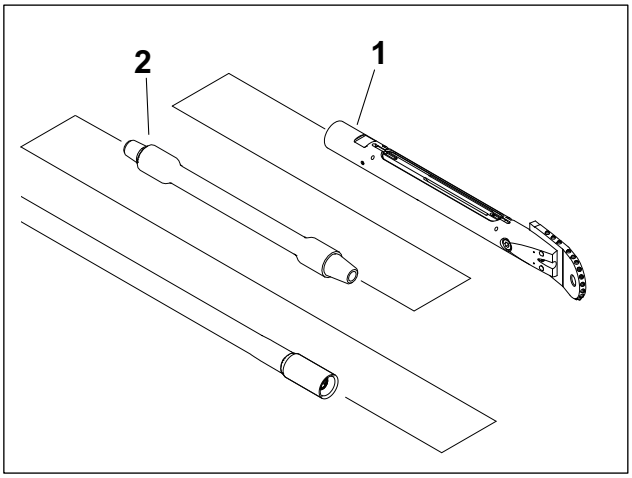

j59om122w.eps

1. Start engine.
2. Position transition sub (2) in front wrench.
3. Apply tool joint compound.
4. Clamp front wrench.
5. Slowly move carriage forward until saver sub body meets transition sub.
6. Rotate spindle clockwise until saver sub threads onto transition sub.
7. Shut off machine.
8. Connect beacon housing (1) to transition sub.
9. Start engine.
10. Position joint between wrenches.
11. Use machine torque to tighten joint fully.

Use EZ Connect Method

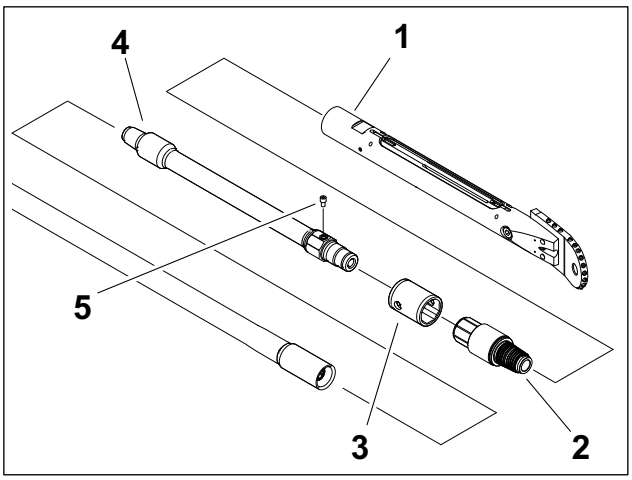

j59om133w.eps

1. Apply tool joint compound to adapter threads.
2. Use quick wrench to connect adapter (2) to beacon housing (1).
3. Slide collar (3) onto transition sub (4).
4. Apply tool joint compound to threads.
5. Connect adapter to transition sub.
6. Unthread connection at least one full flat to align flats.

> **IMPORTANT:** Joint will not be tight. Assembly should have visible gap at shoulder.

7. Slide collar over flats on both transition sub and adapter, ensuring hole in collar is aligned with hole in transition sub.
8. Install bolt (5).

Connect Drill Pipe to Downhole Tool

1. Start engine.
2. Clamp tool in front wrench.
3. Load pipe.
   3.1 Ensure shuttle stop is positioned correctly.
   3.2 Apply tool joint compound to threads in front wrench.
   3.3 Lower pipe lifters.
   3.4 Close grippers.
   3.5 Extend shuttles.
4. Connect pipe to saver sub or SaverLok® body.

   IMPORTANT: Always rotate clockwise unless breaking pipe joint. Rotating counterclockwise will separate joints.

   4.1 Move carriage forward until saver sub/SaverLok meets pipe.
   4.2 Rotate spindle clockwise until saver sub/SaverLok threads onto pipe.
   4.3 Relax grippers.
5. Connect pipe.
   5.1 Slowly move carriage forward to allow pipe to match up.
   5.2 Rotate spindle clockwise until pipe threads together.
   5.3 To fully tighten joint, slowly rotate pipe until spindle stops turning.
   5.4 Unclamp wrench.
   5.5 Open grippers fully.
   5.6 Raise pipe lifters.
   5.7 Retract shuttles.

Drill First Pipe

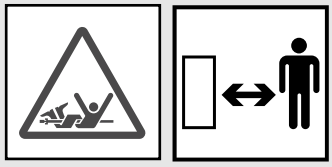

DANGER Rotating shaft. Crushing will cause death or serious injury. Stay away.

To help avoid injury:

- The tracker operator must have communication with the drill operator or DrillLok system must be enabled with the DrillLok key in the operator's possession.
- Do not stand or walk over the bore path while drill string is moving during drilling and backreaming.
- Drill string may wind up during drilling and backreaming. Stay away from drill string until all movement has stopped.



WARNING Underground utilities. Contact can cause death or serious injury. Locate and verify underground utilities before digging or drilling.

To help avoid injury:

- Use electric strike system.
- Expose line by careful hand digging or soft excavation. Use beacon to track bore path. If utility must be crossed, tracker operator must watch the drill head during drilling and backreaming. Consider type and stability of soil around exposed lines. Take precautions to ensure ground does not give way under tracker operator.

1. Turn on drilling fluid.
2. Visually check for drilling fluid flow.
3. Turn drill outer pipe to starting position, if equipped.
4. Rotate inner spindle clockwise, if equipped.
5. Slowly move carriage forward. Drill first pipe as straight as possible.
6. Monitor gauges.

NOTICE: AT only:

- If inner rotation torque approaches 3000 ft•lb (4067 N•m), slow carriage travel.
- If inner rotation stalls, stop carriage thrust. If inner rotation does not resume, pull pipe back.

Swab the Hole

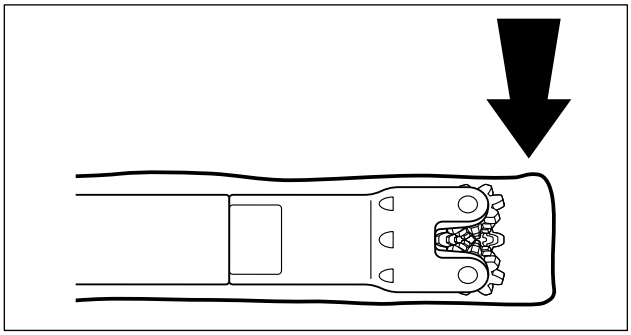
j07om047c.eps

Swab the hole as needed after each pipe is drilled to remove cuttings and keep the bore clear.

IMPORTANT: Some conditions may require more frequent swabbing.

1. Move carriage forward until it touches rear wrench.
2. Move carriage to rear of drill frame with drilling fluid and inner rotation on.
3. Move carriage forward until pipe joint is properly located between wrenches for joint breakout.

Enable Automated Pipe Loader System

IMPORTANT:

- If operator leaves the seat during an add or remove pipe cycle, pipe cycle will pause. When operator returns to the seat, the resume button must be pressed to continue automation.
- For best results, automated pipe loader should be enabled before clamping front wrench on pipe.

Add Pipe	Remove Pipe
1. Ensure correct pipe row is selected. If current row is empty, select next full row. 2. Ensure shuttles are positioned under selected row. Extend and retract shuttles to allow row stop to move if needed. 3. Turn on autothrottle. 4. Add pipe. Pipe will be lowered into grippers. See "Add pipe control" on page 55.	1. Ensure correct pipe row is selected. If current row is empty, select next full row. 2. Ensure shuttles are positioned under selected row. Extend and retract shuttles to allow row stop to move if needed. 3. Turn on autothrottle. 4. Remove pipe. Pipe will be lifted out of grippers. See "Remove pipe control" on page 55.

Add Pipe

AT Mode

1. Turn autothrottle on.
2. Enable automated pipe loader system (optional).
3. Break joint at saver sub/SaverLok body.
   - 3.1 Rotate outer pipe to 3 o'clock.
   - 3.2 Clamp front wrench.
   - 3.3 Locate drill head.
   - 3.4 Rotate spindle counterclockwise. Carriage will slowly move back as threads separate.
   - 3.5 After threads are fully separated, stop rotation and move carriage back until rear stop indicator lights. If automated pipe loader mode is selected tool joint compound will be applied while carriage is moving.
4. Load pipe.

Manual Pipe Loader Controls	Automated Pipe Loader Controls
4.1 Ensure that pipe lifters are completely lowered.	4.1 If pipe box row is empty, select next empty row.
4.2 Close grippers.	4.2 With carriage at rear stop position, resume.
4.3 Extend shuttles.	
4.4 Apply tool joint compound at wrench.	
4.5 Raise pipe lifters.	

5. Connect pipe to saver sub/SaverLok.

> **IMPORTANT:** Counterclockwise rotation can unthread pipe in the ground.

   - 5.1 Move carriage forward until saver sub/SaverLok meets pipe.
   - 5.2 Rotate spindle clockwise until saver sub/SaverLok threads onto pipe.
   - 5.3 Relax grippers, or resume if using automated pipe loader mode.

6. Connect new pipe.

Manual Pipe Loader Controls	Automated Pipe Loader Controls
6.1 Slowly move carriage forward to allow inner rod to match up.	6.1 Slowly move carriage forward to allow inner rod to match up.
6.2 Rotate spindle clockwise until pipe threads together.	6.2 Rotate spindle clockwise until pipe threads together.
6.3 To fully tighten joint, slowly rotate pipe until spindle stops turning.	6.3 Resume. Grippers will open, shuttles will retract, and pipe lifters will lower.
6.4 Unclamp wrench.	6.4 To fully tighten joint, slowly rotate pipe until spindle stops turning.
6.5 Open grippers fully.	6.5 Unclamp wrench.
6.6 Retract shuttles.	
6.7 Lower pipe lifters.	

7. Turn on drilling fluid until pipe fills and fluid pressure begins to rise.
8. Adjust fluid flow.
9. Set clock position for steering or rotate spindle.
10. Turn inner rotation on.
11. Slowly move carriage forward.
12. Adjust rotation speed according to bit size and soil conditions. See "Systems and Equipment" on page 113.
13. Set cruise control (optional). See "Cruise Control" on page 122.
14. Monitor gauges.
15. Locate drill head with tracker at least every half-length of pipe.

IMPORTANT:

- All tracking equipment is subject to magnetic interference. The presence of interference can cause inaccuracies in both location and depth calculations. See tracker operator's manual for more information.
- To improve accuracy of depth estimate, turn inner rotation off, release spindle brake, and rotate outer pipe to 3 o'clock.

16. Set spindle brake (optional).

JT Mode

1. Enable autothrottle.
2. Enable automated pipe loader system (optional).
3. Break joint at saver sub/SaverLok.
   3.1 Position pipe between wrenches. See "Clamp Pipe" on page 92.
   3.2 Locate drill head.
   3.3 Rotate pipe to achieve strongest signal from beacon/transmitter.
   3.4 Clamp front wrench.
   3.5 Rotate spindle counterclockwise. Carriage will slowly move back as threads separate.
   3.6 After threads are fully separated, stop rotation and move carriage back until rear stop indicator lights. If automated pipe loader mode is selected, tool joint compound will be applied while carriage is moving.
4. Load pipe.

Manual Pipe Loader Controls	Automated Pipe Loader Controls
4.1 Ensure that pipe lifters are completely lowered.	4.1 If pipe box row is empty, select next empty row.
4.2 Close grippers.	4.2 With carriage at rear stop position, resume.
4.3 Extend shuttles.	
4.4 Apply tool joint compound at wrench.	
4.5 Raise pipe lifters.	

5. Connect pipe to saver sub/SaverLok.

IMPORTANT: Counterclockwise rotation can unthread pipe in the ground.

   5.1 Move carriage forward until saver sub/SaverLok meets pipe.
   5.2 Rotate spindle clockwise until saver sub/SaverLok threads onto pipe.
   5.3 Relax grippers, or resume if using automated pipe loader mode.

6. Connect new pipe.

Manual Pipe Loader Controls	Automated Pipe Loader Controls
6.1 Slowly move carriage forward to allow pipe to match up.	6.1 Slowly move carriage forward to allow pipe to match up.
6.2 Rotate spindle clockwise until pipe threads together.	6.2 Rotate spindle clockwise until pipe threads together.
6.3 To fully tighten joint, slowly rotate pipe until spindle stops turning.	6.3 Resume. Grippers will open, shuttles will retract, and pipe lifters will lower.
6.4 Unclamp wrench.	6.4 To fully tighten joint, slowly rotate pipe until spindle stops turning.
6.5 Open grippers fully.	6.5 Unclamp wrench.
6.6 Retract shuttles.	
6.7 Lower pipe lifters.	

7. Turn on drilling fluid until pipe fills and fluid pressure begins to rise.
8. Adjust fluid flow.
9. Rotate spindle.
10. Slowly move carriage forward.
11. Adjust rotation speed according to bit size and soil conditions. See "Systems and Equipment" on page 113.
12. Set cruise control (optional). See "Cruise Control" on page 122.
13. Monitor gauges.
14. Locate drill head with tracker at least every half-length of pipe.

> ***NOTICE:*** All tracking equipment is subject to magnetic interference. The presence of interference can cause inaccuracies in both location and depth calculations. See tracker operator's manual for more information.

Correct Direction

Correcting direction is a skill operators gain with experience and knowledge of equipment and soil conditions. These instructions cover only basic procedures. For information about specific equipment or jobsites, contact your Ditch Witch dealer.

To track progress and make corrections, one crew member locates the drill head and sends instructions to the operator. Corrections are made by tracking the drill head, comparing the current position to bore plan, and steering drill head as needed.

Basic Rules

General

- Steering ability depends on soil condition; bit, drill head, and nozzle used; roll of drill head; and distance pushed without outer rotation.
- All corrections should be made as gradually as possible. See "Recommended Bend Limits" on page 30.
- Over correcting will cause "snaking." This can damage pipe and will make drilling and pullback more difficult. Begin to straighten out of each correction as early as possible.
- Do not push an entire piece of drill pipe into ground without rotation.This can exceed bend radius and cause pipe failure.

AT Mode

- Steering in rock is slower than steering in other soil conditions.
- Inner rod is rotating at all times when AT mode is selected and inner rotation is turned on.
- Stop outer rotation and set spindle brake when making directional changes.
- Depth estimate and pitch accuracy improve if drill head is at 3 o'clock when reading is taken.
- Pull back 6" (152 mm) of pipe before checking pitch.

Procedure (AT)

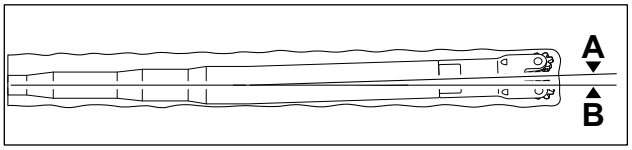

j15om033h.eps

1. Locate drill head. Take reading available with beacon and tracking equipment such as:
   - depth

     IMPORTANT: Depth estimate improves if drill head is at 3 o'clock position (B) rather than at 12 o'clock or 6 o'clock position (A).

   - pitch
   - left/right information
   - temperature
   - beacon roll
2. Compare position to bore plan to determine direction.
3. Position drill head.
4. Drill pipe.

Drill Head Position (JT)

Drill head position is determined by reading beacon roll. Roll is displayed as a clock face position.

1. Read beacon roll.
2. Slowly rotate pipe until tracking equipment displays desired beacon roll.

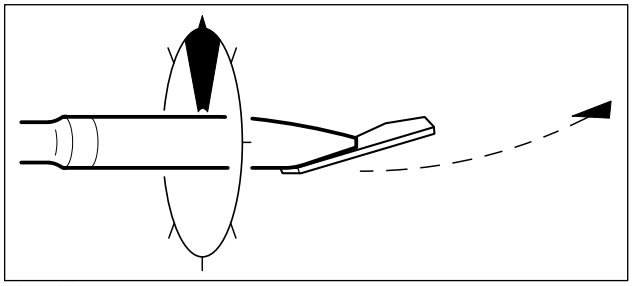
j07om048c.eps

To change direction:

JT Mode	AT Mode
1. Rotate pipe to intended clock position. 2. Push pipe into ground.	1. Rotate outer pipe to intended clock position. 2. Set spindle brake. 3. Start inner rotation. 4. Push pipe into ground.

To move forward without changing direction:

JT Mode	AT Mode
1. Rotate pipe. 2. Push pipe into ground.	1. Rotate outer pipe. 2. Start inner rotation. 3. Push pipe into ground.

Use Autocarve Mode

NOTICE: Counterclockwise rotation can unthread pipe in the ground.

IMPORTANT:

- High-speed carriage control and cruise control are disabled while in autocarve mode.
- Autocarve mode is disabled while front wrench is clamped.
- Adding or removing pipe does not affect autocarve mode.

Autocarve helps the operator change direction when thrust stalls in difficult soil conditions while drilling in JT or AT dirt mode. Autocarve rotates the bit clockwise and counterclockwise to grind away soil, clearing a path to improve steering through tough formations. Autocarve does not replace AT mode.

1. Rotate drill head to desired position to position downhole tool for carving.
2. Enable autocarve.
3. Push carriage control joystick forward and return to neutral to begin carving.

   IMPORTANT: Pull carriage control joystick to pause carving.

4. Adjust thrust speed using set/resume switch. Adjust as needed while carving.
5. Set carve window. Adjust as needed while carving.
6. Adjust rotation speed using set/resume switch. Adjust as needed while carving. Use multi-use button for finer adjustment.

   IMPORTANT: Using multi-use button activates reaming function and will change steering direction unless tool is stopped at original position before releasing multi-use button.

7. After carving a few inches, press and hold multi-use button and rotate to full clockwise for maximum rotation. When tool rotates freely, reduce rotation speed and stop at desired carve position. Release multi-use button and resume carving.

   IMPORTANT: If rotation is restricted, move carriage back slightly until full rotation is possible, then move carriage forward while rotating.

8. Exit autocarve mode and continue normal drilling.

   IMPORTANT: Autocarve settings are retained until machine is turned off.

Record Bore Path

Locate drill head every half-length of pipe. As job is completed, record actual data for each drill pipe. List pitch and depth of each joint and a brief description of procedure. In addition, draw a simple sketch of jobsite and record depth and rough location of pullback.

Subsite bore tracking software is also available for plotting and tracking bore path. This software utilizes a Subsite tracking system, including tracker, display, tracking beacon, and special software. The display can store jobs in its memory or the system can be run in the field using a laptop computer. Contact your Ditch Witch dealer for more information.

Surface Drill Head



DANGER Moving or thrown tools. Impact will cause death or serious injury. Never use pipe wrenches on drill string. Follow procedure in operator's manual.

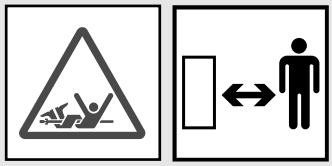

DANGER Rotating shaft. Crushing will cause death or serious injury. Stay away.

To help avoid injury:

- Tracker operator and drill operator should maintain two-way communication.
- Drill operator should be instructed to discontinue drill string rotation as soon as drill bit exits the bore. Use only thrust to extend drill string beyond exit hole.
- Keep everyone clear of the exposed drill string.
- Only enter pit when clear communication is given by the drill operator that the machine is shut down. If using DrillLok mode, only enter pit when DrillLok mode is turned off and DrillLok indicator is lit. See "DrillLok" on page 136.

1. Steer drill head to target pit or up through surface.

   NOTICE: See "Recommended Bend Limits" on page 30.

2. Turn drilling fluid off as soon as drill head emerges.
3. If bore is on a grade, keep drill string connected to spindle.
4. If using DrillLok mode, allow tracker operator to remotely disable thrust/pullback and rotation. Tracker operator must ensure DrillLok indicator is lit before changing downhole tools.

   If not using DrillLok mode, turn off machine and keep key in tracker operator's possession before changing downhole tools.

5. Clean drill head.

   IMPORTANT: Ensure threads remain clean.

6. Disconnect EZ-Connect joint or use appropriate tool such as an exit side breakout wrench to remove drill head assembly. Follow manufacturer's instructions for use.

Backream



DANGER Moving or thrown tools. Impact will cause death or serious injury. Never use pipe wrenches on drill string. Follow procedure in operator's manual.

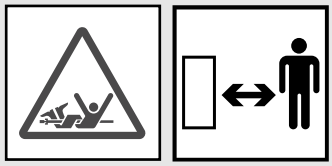

DANGER Rotating shaft. Crushing will cause death or serious injury. Stay away.

To help avoid injury:

- Ensure swivel turns freely with product attached.
- Tracker operator and drill operator should maintain two-way communication.
- Begin backream only when tracker operator has communicated that everyone is clear of the exposed backream string or has enabled thrust and rotation hydraulics using DrillLok system.
- Never allow anyone to stand to the side of the exposed drill string. Drill string and backreamer can move sideways suddenly if rotated while away from the exit hole.



WARNING Underground utilities. Contact can cause death or serious injury. Locate and verify underground utilities before digging or drilling.

To help avoid injury:

- Continue to use electric strike system during backreaming.
- Watch utility crossings. Consider size of backreamer and ensure there is adequate space between existing utility and backreamer.

NOTICE: Number of passes needed depends on soil conditions. Do not attempt to increase hole size too much in one pass. Several passes using successively larger reamers will be more successful.

If needed, enlarge pilot hole to accommodate larger product. Final hole should be 1.5 times larger than the diameter of product being installed.

Assemble Backream String

1. Select backreamers. See "Drilling Fluid" on page 133.
2. Install appropriate nozzles and determine drilling fluid flow requirements to provide sufficient fluid flow. See page 130 and page 133 for more information.
3. Attach transition sub to drill pipe string.
4. Attach backreamer assembly to transition sub.
5. Attach additional pullback devices or product to end of backreamer assembly.

Begin Backream

1. After backream assembly is attached to pipe, allow tracker operator to leave pit and stand away from exposed drill string.
2. If using DrillLok mode, allow tracker operator to turn on tracker to enable thrust/pullback and rotation.
   If not using DrillLok mode, wait for tracker operator to communicate that backream string is clear.
3. Turn on drilling fluid until pipe fills and fluid pressure begins to rise.
4. Without rotating, slowly pull back until reamer contacts bore opening.
5. Begin slow rotation and pullback.
6. Increase drilling fluid flow and rotation as backream string enters ground.
7. Monitor gauges.

Remove Pipe

1. Enable automated pipe loader system (optional).
2. If pipe box row is full, select next empty row.
3. Position pipe joint between wrenches.
4. Clamp pipes with both wrenches. See "Clamp Pipe" on page 92.

Break Front Joint

1. Turn rear wrench counterclockwise.
2. Unclamp rear wrench and rotate clockwise to original position.
3. Retrieve pipe.

Manual Pipe Loader Controls	Automated Pipe Loader Controls
3.1 Raise pipe lifters. Grippers will open as pipe is lifted. 3.2 Extend shuttles. 3.3 Relax grippers to allow pipe to rotate. 3.4 Lower pipe lifters.	Resume. Shuttles will extend, grippers will close fully and then relax, and pipe lifters will lower.

4. Rotate spindle counterclockwise to separate pipe.

Break Rear Joint

1. Clamp rear wrench.
2. Rotate spindle counterclockwise one revolution to loosen joint at transition sub.

IMPORTANT: Do not fully unthread joint.

3. Unclamp rear wrench.
4. Move carriage back until front end of pipe is lined up with front end of pipe box.
5. Close grippers. If automated pipe loader mode is selected, press resume.
6. Rotate spindle counterclockwise until saver sub is separated from pipe.

7. Move carriage back until rear stop indicator lights.

Manual Pipe Loader Controls	Automated Pipe Loader Controls
7.1 Fully close grippers. 7.2 Ensure pipe lifters are fully lowered. 7.3 Retract shuttle to current pipe row. 7.4 Raise pipe lifters to place pipe in current row. 7.5 Open grippers.	Resume. Shuttles will retract and pipe lifters will raise pipe into pipe box.

8. Attach saver sub/SaverLok to next pipe.
   8.1 Move carriage forward until saver sub touches pipe.
   8.2 Rotate spindle clockwise. Carriage will slowly move forward as pipe is connected.
   8.3 To fully tighten joint, slowly rotate pipe until spindle stops turning.
9. Unclamp front wrench to release pipe.

Remove Pullback Device



⚠ DANGER Moving or thrown tools. Impact will cause death or serious injury. Never use pipe wrenches on drill string. Follow procedure in operator's manual.

Pullback device can be removed when last pipe is on drill frame.

IMPORTANT: Pullback device can also be removed when target pit along bore path has been reached. Remaining pipe is then pulled back and removed.

1. Set engine to low throttle.
2. Turn drilling fluid off.
3. Shut off machine.
4. Clean pullback device.
5. Disconnect pullback material.
6. Remove pullback device using appropriate tool such as an exit side breakout wrench. Follow manufacturer's instructions for use.

Systems and Equipment

Chapter Contents



For additional precautions, see "Safety Awareness" chapter.

IMPORTANT: For more information on how to operate controls, see page 41.

Anchor System 116

- Hydraulic 116
- Standard 118

Cruise Control 122

- Engage 122
- Adjust Settings 122
- Override 123
- Disengage 123
- Resume 123

Diagnostic Codes 124

- Electronic Controlled Engine Overview 124
- Machine Diagnostics System Overview 124
- Reading Engine Diagnostic Codes 124

Downhole Tools 125

- Backreamers 125
- Backreaming Fluid Requirements 126
- Beacon Housings 128
- Bits 129
- Scribe Line Method 130
- Nozzles 130

Drill Pipe 131

- Perform Regular Drill Pipe Care 131
- Use Drill Pipe Correctly 132

Drilling Fluid 133

- Recommended Products 133
- Mixtures 134
- Funnel Viscosity 135

DrillLok System 136

Electric Strike System 137

- Assemble Voltage Detector 137
- Test Strike System 137
- Use ESID Test Tool 138

Pipe Loader 139

- Correct Dropped Pipe 139
- Correct Misaligned or Jammed Pipe 139
- Remove/Install Pipe Box 140
- Rotate Drill Pipe Order 142
- Row Select 142

Sensor Override 143

Wireless Remote Control 144

- Set-Up 144
- Operation 145
- Pair 146

Wireline Operation 147

Anchor System

Hydraulic

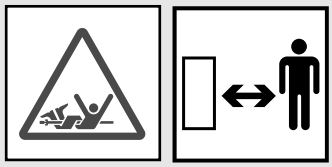

DANGER Rotating shaft. Crushing will cause death or serious injury. Stay away.

To help avoid injury: Never replace anchor collar bolt with one longer than original. Clothing could catch on turning shaft.

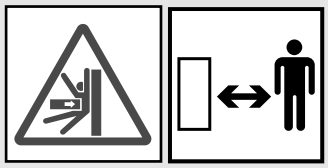

WARNING Horizontal movement. Crushing can cause death of serious injury. Read and understand operator's manual and all safety instructions before use.

To help avoid injury:

- Set stabilizers prior to driving anchors.
- Drive anchors and/or tie off machine before drilling.
- Keep a safe distance away from machine when operating anchors from wireless remote controller.
- Only slide cab after setup is complete.



WARNING Underground utilities. Contact can cause death or serious injury. Locate and verify underground utilities before digging or drilling.

To help avoid injury: If you are not driving anchors to full depth, drive optional ground rod into soil away from horizontal directional drill and connect ground rod to machine. See "Alternate Anchors" on page 118.

Select

There are two anchor options for this machine. Choose the correct anchor type based on job conditions as shown below.

Anchor Type	Jobsite Conditions
Auger bit	soft/hard soil, soft rock
Rock bit	hard/soft rock, asphalt, concrete, cobble

Drive

IMPORTANT: Do not attempt to operate anchor controls while drilling fluid is on.

1. Install centering cap.

   NOTICE: Centering cap must be properly installed to prevent damage to anchor.

   Centering cap is properly installed when:

   - Hardware (4) is secure but not over-tightened.
   - Centering cap (1) is free to slide back and forth inside centering tube (2) under normal load.

2. Use high speed rotation and low thrust to drive anchor into the ground.

   IMPORTANT: Carefully time anchor rotation with anchor movement. Properly driven anchors should not auger up soil.

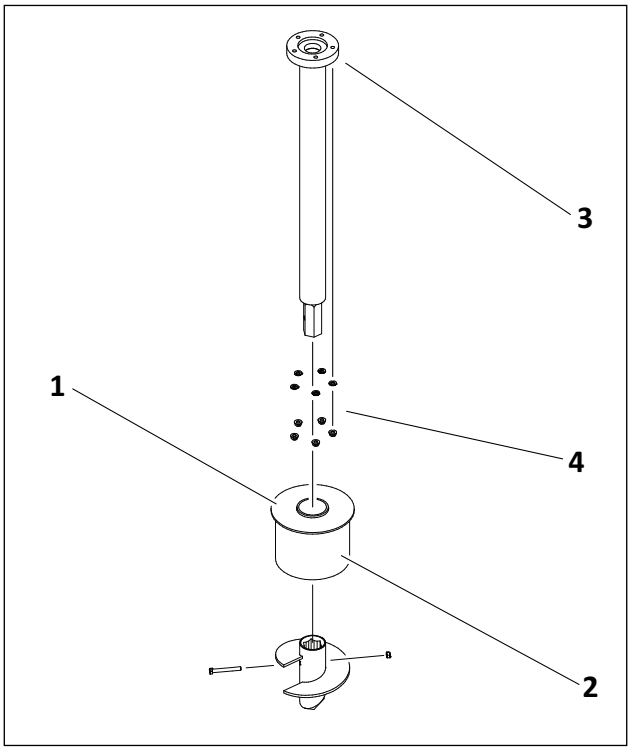

j95om072w22.eps

3. Anchor is set when auger shaft flange (3) rests firmly on centering cap.
4. Repeat process for other anchor.

Remove

1. Use anchor controls to slowly remove anchor from ground.
2. Repeat process for other anchor.

Alternate Anchors

NOTICE:

- If using alternate anchors, additional grounding will need to be done using external kit 100-794. Contact your Ditch Witch dealer for more information.
- Remove paint from all surfaces prior to installing grounding kit.
- Avoid drill string when using alternate anchors.
- Rigging must be able to withstand forces of up to 120,000 lb (534 kN).

IMPORTANT: Remove paint from all surfaces prior to installing grounding kit.

Use alternate anchors in situations where anchors cannot be used or in combination with standard anchors in situations where additional anchoring is needed. Contact a rigging specialist for assistance with this process to ensure alternate anchors can withstand potential forces.

1. Use alternate anchoring (1) when backreaming. Connect chain to pin and run straight back from machine.

   NOTICE: Ensure pin is secure before attaching chain.

2. Use rings (2) located on front of anchor frame to anchor machine when drilling out. Connect a chain to each ring and run straight forward from machine.

   NOTICE: Looping chains through the rings will cause damage to the frame.

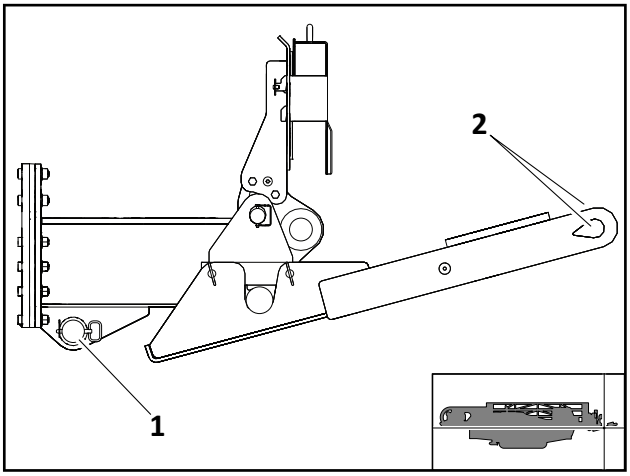

j95om016w22.eps

3. Connect ground rod included in grounding kit to one of the locations shown. Location used depends on anchor setup.

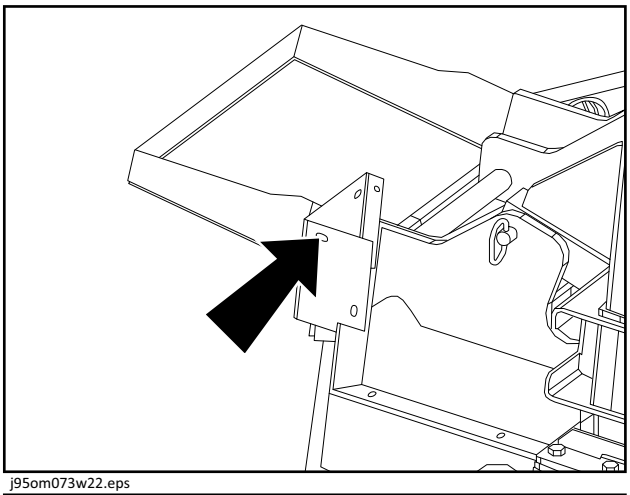

j95om073w22.eps

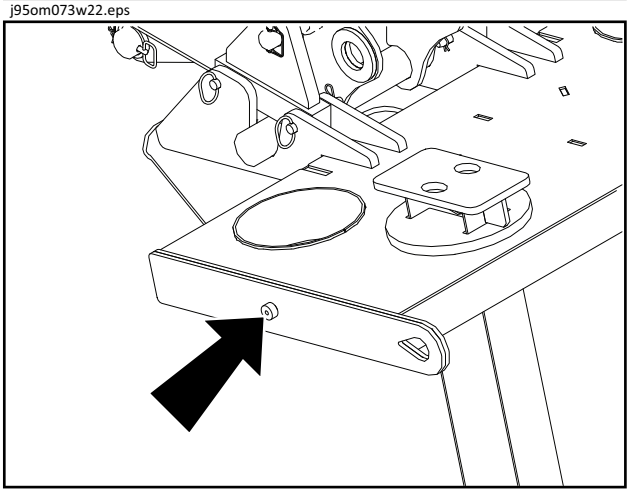

j95om074w22.eps

4. When no anchors are in use, use location shown.

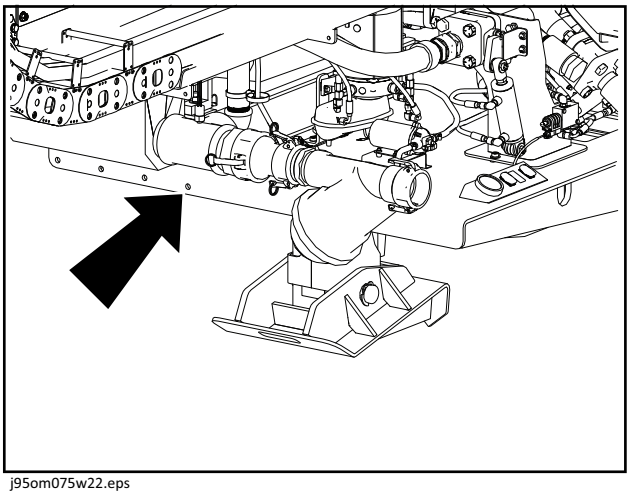

j95om075w22.eps

Standard



WARNING Underground utilities. Contact can cause death or serious injury. Locate and verify underground utilities before digging or drilling.

To help avoid injury: If not driving anchors to full depth, drive optional ground rod into soil away from drilling unit and connect ground rod to drilling unit.

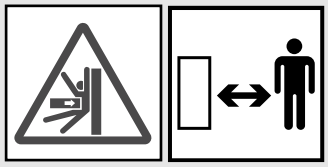

WARNING Horizontal movement. Crushing can cause death of serious injury. Read and understand operator's manual and all safety instructions before use.

To help avoid injury:

- Drive I-beams or optional anchors correctly and/or tie off machine before drilling.
- Only slide cab after setup is complete.

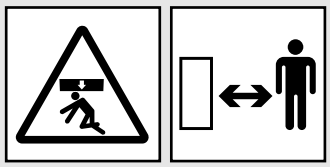

WARNING Raised component. Crushing can cause death or serious injury. Stay away. Use correct equipment and procedures.

Drive

1. Ensure machine is in rig setup mode.
2. Set throttle to low.
3. Tilt front of drill frame until anchor plate (3) is flat against the ground.
4. Unpin drill frame from front foot.
5. Using remote control, move the machine in reverse so stakedown holes are clear.
6. Position bushings in the four holes on front foot (2).

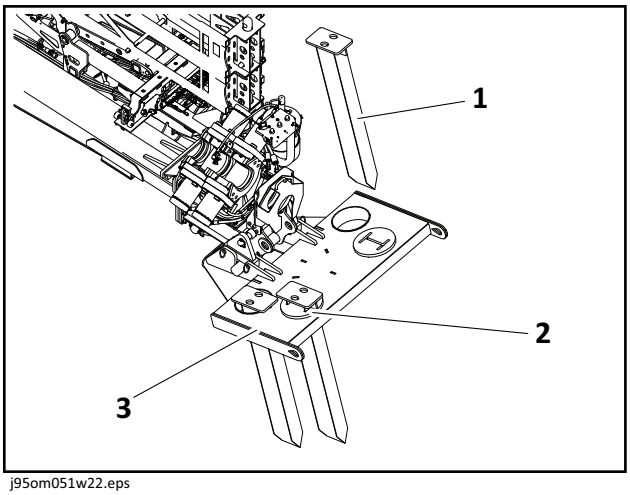

j95om051w22.eps

IMPORTANT: Additional stakes may be used in rear holes.

7. Place I-beams (1), pointed end down, into bushings.

8. Use the shovel or bucket of a backhoe or similar machine to slowly press the I-beams into the ground.
9. Continue pressing until anchor plate is securely anchored against the ground.
10. Using remote control, move the machine into position to reconnect the drill frame to the anchor plate.
11. Tilt drill frame to working angle.
12. Lower stabilizers.
13. Connect and test electrical strike system.
14. Slide cab into drill position.
15. Engage drill mode.

Cruise Control

During the bore, thrust/pullback and rotation can be set to match ground conditions. Cruise control enables the machine to maintain these settings hands-free. These settings can be engaged, disengaged, overridden, and resumed at any time.

Engage

IMPORTANT: In order for cruise control to function, front wrench must be unclamped and shuttles must be fully retracted.

1. Position joystick to desired thrust or pullback settings.
2. Position joystick to desired rotation setting (optional).
3. Press set. Cruise mode indicator will appear on display.
4. If using cruise control for thrust/pullback and rotation, release joystick. If not using cruise control for rotation, use joystick to control rotation.

Adjust Settings

Thrust or Pullback

To increase thrust or pullback speed, move joystick to neutral position and press resume.

To decrease thrust or pullback speed, move joystick to neutral position and press set.

Rotation

To increase rotation speed, move joystick to left of center and press resume.

To decrease rotation speed, move joystick to left of center and press set.

Override

To override thrust/pullback settings, move joystick out of neutral and beyond current setting. Machine will increase to joystick setting.

To return to previous setting, release joystick.

Disengage

To disengage cruise control, move joystick out of neutral in opposite direction of carriage travel. Cruise mode indicator on display will go off and carriage will stop moving.

Resume

Move joystick out of neutral in direction to be resumed (forward or backward) and press resume. Thrust and rotation will resume at the previous settings and cruise mode indicator will appear on display.

Diagnostic Codes

This machine is equipped with two diagnostic systems: engine and machine. The engine diagnostic system detects errors within the engine operating system and communicates fault codes on the display. The machine diagnostic system detects errors within the automated machine control system. These error codes are also displayed on the upper display.

Use the display to hide/recall active codes. Note the SPN, FMI, and description of the diagnostic code for future reference.

IMPORTANT: Do not shut off machine. Diagnostic codes are cleared each time machine is shut off.

Electronic Controlled Engine Overview

This machine is equipped with a self-diagnostic computer-controlled engine management system. An Electronic Control Unit (ECU) monitors engine performance and makes adjustments to optimize that performance.

Indicators, plus diagnostic codes and messages, on the display tell the operator about potential engine problems. Depending on the severity of the problem, the ECU may reduce engine power or speed or may shut the engine down. The ECU also stores all diagnostic codes regardless of severity.

Machine Diagnostic System Overview

Use the display to view condition of the machine automated diagnostic system. Under normal operating conditions, any diagnostic code that is recorded will be shown as a pop-up message on the display.

Reading Engine Diagnostic Codes

Engine diagnostic codes are shown in pop-up messages on the display. Amber or yellow messages indicate problems that should be addressed but do not need immediate attention. Red messages indicate problems that need immediate attention. Failure to address a problem indicated by a red message will generally result in the engine derating or shutting down.

Downhole Tools

Use the chart below when selecting downhole tools.

Soil	Description
Sandy	Sugar sand, blow sand, or other soils where sand is the predominant component
Soft	Sandy loam
Medium	Loams, loamy clays
Hard	Packed clays, gumbo, all compacted soils
Cobble rock	Chunk rock, glacial till, cobble, gravel
Soft rock	Sandstone, shale, coral, caliche, chaulk
Medium rock	Limestone, caliche, sandstone, shale
Hard rock	Granite, schist, marble, hard limestone

Backreamers

A backreamer enlarges the hole as pipe is pulled back through the bore. No one backreamer works well in all conditions. These charts are meant as a guideline only. Contact your Ditch Witch dealer for soil conditions and backreamer recommendations for your area.

- 1 = best
- 2 = good
- 3 = fair
- 4 = not recommended

Backreamer	Sandy Soil	Soft Soil	Medium Soil	Hard Soil	Rocky Soil	Soft Rock	Hard Rock
Beavertail HD	2	1	1	1	4	4	4
Compact Fluted HD	3	3	1	2	2	3	4
EZ	3	1	2	2	3	3	4
Kodiak™ HD	3	3	3	2	1	2	3
Rockmaster®	4	4	4	4	3	1	1
Sandhog HD	1	1	2	3	3	4	4
Warthog™ HD	4	3	2	1	2	2	3

Backreaming Fluid Requirements

Backreaming is only successful when enough fluid reaches the bore. The amount of fluid needed depends on size of bore and soil condition.

Follow these steps to find the minimum amount of fluid needed in perfect conditions.

IMPORTANT: Using less than the recommended amount of fluid can cause bore to be dry and unsuccessful.

Instructions	Example
1. Find amount of fluid needed for your size of backreamer. See the following table.	6" (152 mm) backreamer requires at least 1.47 gal/ft (18.24 L/min)
2. Multiply this number by distance per minute you plan to backream. The answer is an estimate of amount of fluid you will need for each minute of backreaming.	1.5 gal (18 L) x 2'/min (0.5 m/min) = 3 gal (9 L) for each minute of backreaming

Backreamer/Product Diameter	Gal/ft	L/m	Backreamer/Product Diameter	Gal/ft	L/m
0.5" (13 mm)	0.01	0.13	13.5" (343 mm)	7.44	92.35
1" (25 mm)	0.04	0.51	14" (356 mm)	8.00	99.31
1.5" (38 mm)	0.09	1.14	14.5" (368 mm)	8.58	106.54
2" (51 mm)	0.16	2.03	15" (381 mm)	9.18	114.01
2.5" (64 mm)	0.25	3.17	15.5" (394 mm)	9.80	121.74
3" (76 mm)	0.37	4.56	16" (406 mm)	10.44	129.72
3.5" (89 mm)	0.50	6.21	16.5" (419 mm)	11.11	137.95
4" (102 mm)	0.65	8.11	17" (432 mm)	11.79	146.44
4.5" (114 mm)	0.83	10.26	17.5" (445 mm)	12.49	155.18
5" (127 mm)	1.02	12.67	18" (457 mm)	13.22	164.17
5.5" (140 mm)	1.23	15.33	18.5" (470 mm)	13.96	173.42
6" (152 mm)	1.47	18.24	19" (483 mm)	14.73	182.92
6.5" (165 mm)	1.72	21.41	19.5" (495 mm)	15.51	192.68
7" (178 mm)	2.00	24.83	20" (508 mm)	16.32	202.68
7.5" (191 mm)	2.29	28.50	20.5" (521 mm)	17.15	212.94
8" (203 mm)	2.61	32.43	21" (533 mm)	17.99	223.46
8.5" (216 mm)	2.95	36.61	21.5" (546 mm)	18.86	234.23
9" (229 mm)	3.30	41.04	22" (559 mm)	19.75	245.25
9.5" (241 mm)	3.68	54.73	22.5" (572 mm)	20.65	256.52
10" (254 mm)	4.08	50.67	23" (584 mm)	21.58	268.05
1.5" (267 mm)	4.50	55.86	23.5" (597 mm)	22.53	279.83
11" (279 mm)	4.94	61.31	24" (610 mm)	23.50	291.86
11.5" (292 mm)	5.40	67.01	24.5" (622 mm)	24.49	304.15
12" (305 mm)	5.88	72.97	25" (635 mm)	25.50	316.69
12.5" (318 mm)	6.37	79.17	25.5" (648 mm)	26.53	219.49
13" (330 mm)	6.90	85.63	26" (660 mm)	27.58	342.53

Beacon Housings

Rockmaster Lid Installation

1. Clean all threads, bolt holes, and mating surfaces.
2. Install lid (3) in cavity and slide toward rear of housing to engage tabs.
3. Install caliper bolt (4) in cross hole at front of lid. Tighten to 50-100 ft•lb (67.8-135.6 N•m). Tighten set screw (1) in caliper bot to 50-100 ft•lb (67.8-135.6 N•m).
4. Tighten 4 extended point set screws (2) to 20-25 ft•lb (27-33.9 N•m).

IMPORTANT: If these set screws are not tightened during operation, they should be removed.

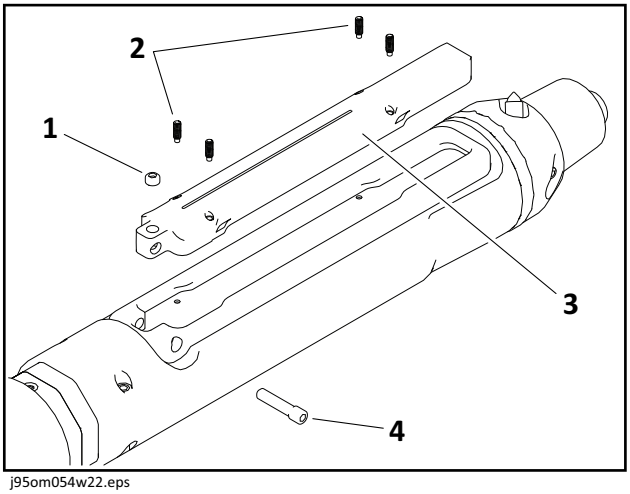

j95om054w22.eps

Dirt Housing Lid Installation

1. Clean all threads, bolt holes, and mating surfaces.
2. Place lid on trough and install bolts (1).
3. Use punch holder to drive roll pins (2) from direction shown.

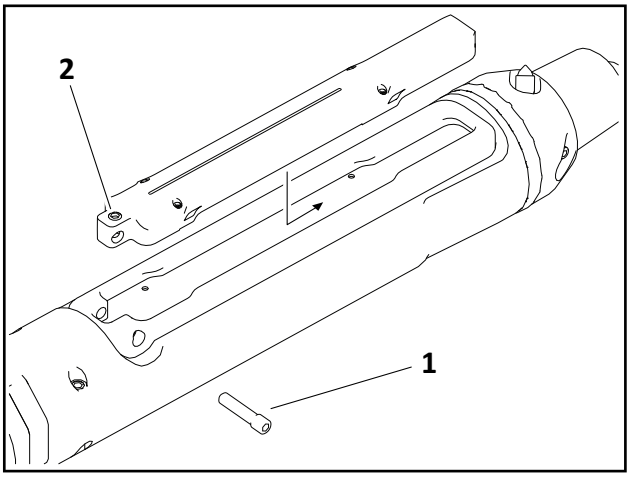

j95om055w22.eps

Bits

Selection

These charts are meant as a guideline only. No one bit works well in all conditions. Contact your Ditch Witch dealer for soil conditions and bit recommendations for your area.

- 1 = best
- 2 = good
- 3 = fair
- 4 = not recommended

Bit	Sandy Soil	Soft Soil	Medium Soil	Hard Soil	Rocky Soil	Soft Rock	Hard Rock
Omni	1	1	1	1	2	2	4
Rockmaster	4	4	3	2	1	1	1
Steep Taper Tuff	2	2	1	1	2	1	4
Tornado	2	2	2	1	1	3	4
Tuff	3	2	1	1	3	1	4

Installation

Remove all paint and primer from mating surfaces before attaching any bit to housing. Install screws and tighten bolts to 580 ft•lb (786 N•m).

Scribe Line Method

Use appropriate tool such as an exit side breakout wrench to remove drill head assembly. Follow manufacturer's instructions for use.

1. Scribe straight line across joint on both sides of separating line (A).
2. To join, scribe second line (B) on movable side of joint in the opposite direction of tightening action. Refer to table for correct dimension.

Connection	Dimension
Power Pipe/Power Pipe HD	3/8" (0.95 cm)
JT transition sub to dirt housing	3/4" (1.9 cm)
AT pipe to pipe/transition sub/Rockmaster housing	3/8" (0.95 cm)

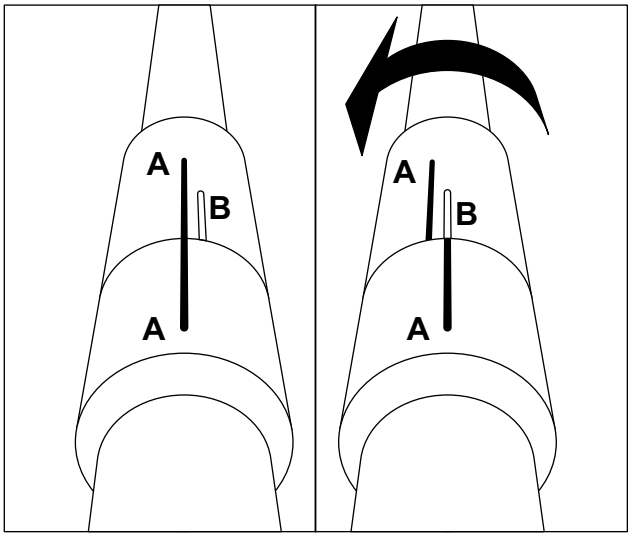

j07om071h.eps

Nozzles

Nozzles control fluid flow from the pipe to the bore. Select nozzles that will supply at least the amount of fluid per minute needed for the flow and pressure you will be using. Low drilling fluid pressures during operation can result in plugged nozzles and cuttings inside the drill string. Maintain drilling fluid pressures above 100 psi (6.9 bar) during operation. A nozzle that will supply more fluid per minute is recommended. Contact your Ditch Witch dealer for nozzle recommendations.

Drill Pipe

Perform Regular Drill Pipe Care

Precondition New Pipe

NOTICE: Failure to follow this procedure could result in damaged or destroyed pipe.

IMPORTANT: Precondition new SaverLok body or saver sub using this procedure.

Repeat this procedure three times for each piece of pipe before it is used the first time.

1. Hand lubricate entire surface of threads and shoulders of both ends of pipe with tool joint compound. See "Recommended Lubricants" on page 156.
2. Join pipe and tighten joint.
3. Break joint.
4. Move pipe back to box.

Lubricate Joints before Each Use

Lubricate threads and shoulders of male joints with tool joint compound. This prevents rust and reduces wear on shoulders and threads. See "Recommended Lubricants" on page 156.

Clean the Threads

NOTICE: Do not use gasoline or other petroleum-based solvents. This prevents tool joint compound from sticking to the joints and will reduce thread life.

Clean the threads as needed with high-pressure water and detergent.

Replace Worn Saver Sub

NOTICE: Failure to replace SaverLok body or saver sub will result in damaged drill pipe.

Because each pipe comes in contact with the SaverLok body/saver sub, check regularly for wear. Compare condition of threads to condition of drill pipe threads. Replace any time when its thread condition is not better than thread condition of drill pipe. See "Saver Sub System" on page 186.

Use Drill Pipe Correctly

Align the Joints

Always carefully align the male and female ends of pipe before threading them together.

NOTICE:

- Poor alignment can damage the threads and destroy the usefulness of the joint.
- If joints get out of alignment during a bore, use frame tilt or rear stabilizers to adjust.
- Misaligned tool joints can cause excessive noise and heat in the form of smoke emitting from the tool joint during makeup. If this occurs, adjust machine to eliminate misalignment.

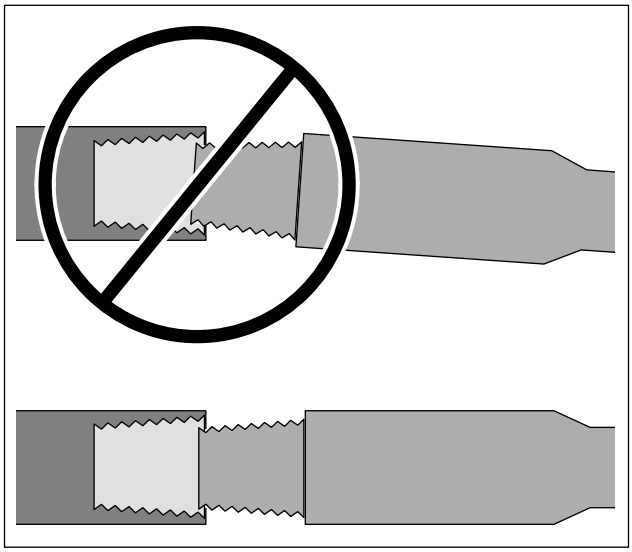
DrillPipe_Align.eps

Clamp Pipe Correctly

See "Clamp Pipe" on page 92.

Make Up and Break Out Joints Correctly

NOTICE:

- Always connect and disconnect joints slowly and deliberately.
- Do not ram pipes together during makeup or force them apart during breakout.
- If Virtual Assisted Makeup (VAM) is not functioning correctly, damage can occur to drill pipe and inner rod.

During pipe change operation when front wrench is clamped and carriage has reached front or rear home indicator, virtual assisted makeup automatically controls thrust to match speed and direction of rotation to smoothly thread or unthread pipe sections.

- To connect pipes and fully tighten joint, slowly rotate pipe until spindle stops turning and full pressure is developed. Carriage will move forward automatically as pipes thread together.
- To disconnect pipes, slowly rotate spindle counterclockwise. Carriage will move back automatically as pipes separate.

Do Not Overwork Pipe

NOTICE: Bending pipe more sharply than recommended will damage pipe and cause failure.

Do not exceed the bend radius for pipe. See "Recommended Bend Limits" on page 30. Do not oversteer.

Drilling Fluid

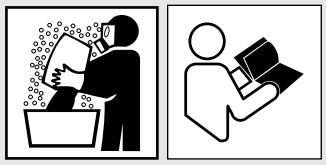

⚠ WARNING Chemicals. Exposure can cause death, serious injury, or illness. Follow instructions on labels and in Safety Data Sheets (SDS).

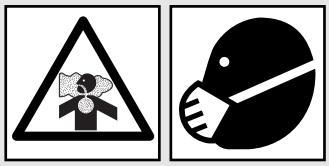

⚠ WARNING Silica dust. Exposure can cause lung disease. Use breathing protection.

To help avoid injury:

- Use water spray or other means to control dust.
- Follow US Occupational Safety and Health Administration (OSHA) or other applicable regulating guidelines for appropriate breathing protection or dust control methods.

Recommended Products

For productive drilling and equipment protection, use these recommended products, available at your Ditch Witch dealer.

Product	Description
Bentonite	Forms a thin cake on bore walls, lubricating the bore and keeping it open and holding fluid
Premixed bentonite	Contains premixed bentonite, polymer, and soda ash
Polymer	Provides lubrication, increases viscosity in average soils and heavy clay, and reduces swelling that traps pipe in the bore in swelling clay
Wetting agent	Water soluble cleaning solution
Soda ash	Used to adjust pH of water and water hardness

Match drilling fluid to soil type. This chart is meant as a guideline only. Contact your Ditch Witch dealer or drilling fluid representative for drilling fluid recommendations and soil conditions in your area, or use the Fluid Formulator on www.ditchwitch.com.

Soil Type	Drilling Fluid Recommendation
Smooth, flowing sand	Bentonite or premixed bentonite + medium chain polymer
Coarse sand or light soil	Bentonite or premixed bentonite
Heavy or swelling clay	Long chain polymer + wetting agent
Rock	Premixed bentonite

Mixtures

Bentonite does not mix well in water containing polymer. To use both, mix bentonite first, then add polymer. When adding other products follow the order listed below.

IMPORTANT:

- If chemicals are added in the wrong order, they will not mix properly and will form clumps.
- If tank contains bentonite/polymer mix and more drilling fluid is needed, completely empty tank and start with fresh water before mixing another batch.

1. Soda ash
2. Bentonite
3. Polymer
4. Wetting agent

Some things to remember when mixing bentonite:

- Use clean water free of salt, calcium, or excessive chlorine.
- Use water with pH level between 9 and 10.
- Use water with hardness of less than 120 ppm.
- Do not use bentonite containing sand.
- Mix bentonite thoroughly or it will settle in tank.
- Do not mix bentonite to a funnel viscosity of over 50. See "Funnel Viscosity" on page 135.

Funnel Viscosity

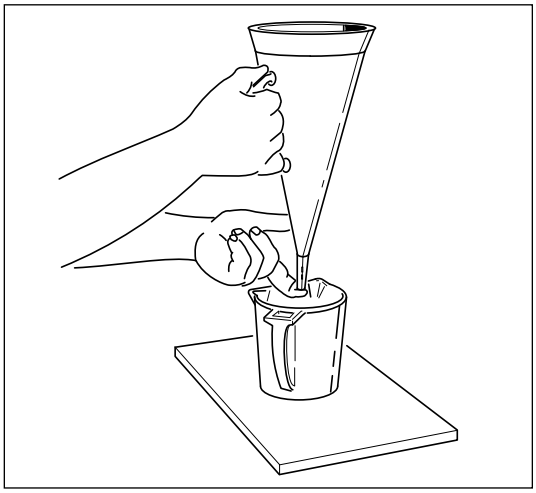
j07om033c.eps

Viscosity is the measure of internal resistance of a fluid to flow; the greater the resistance, the higher the viscosity. Viscosity of drilling fluids must be controlled. Contact your Ditch Witch dealer or drilling fluid representative for more information.

To determine viscosity, you will need a Marsh funnel (p/n 259-267) and a measuring cup, available from your Ditch Witch dealer.

IMPORTANT: Make sure Marsh funnel is clean and free of obstruction and that you have a stopwatch available for timing the viscosity.

1. Using wash hose and a clean container, take a fresh sample of drilling fluid. The sample must be at least 1.5 qt (1.4 L).
2. With finger over bottom of funnel, fill with fluid from the container through the screen until fluid reaches the bottom of the screen.
3. Move funnel over 1 qt (0.95 L) container.
4. Remove finger from bottom of funnel and use the stopwatch to count the number of seconds it takes for 1 qt (0.95 L) of fluid to pass through the funnel. The number of seconds is the viscosity.
5. Thoroughly rinse measuring cup and Marsh funnel.

DrillLok

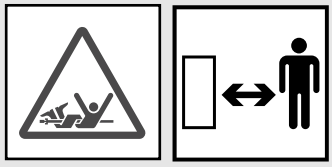

DANGER Rotating shaft. Crushing will cause death or serious injury. Stay away.

To help avoid injury:

- Use DrillLok system every time downhole tools are changed or during other times when the drill string is exposed.
- If not using a DrillLok system, turn off machine and keep key in tracker operator's possession before changing downhole tools.

IMPORTANT:

- See "DrillLok key" on page 72.
- This mode does not disable thrust and rotation immediately. Functions are disabled within 16 seconds.
- Tracker operator cannot disable thrust and rotation from tracker if DrillLok key is installed in machine and turned to the deactivated position.

This mode allows the tracker operator to disable hydraulic power to machine thrust and rotation. DrillLok indicator (shown), located on front of machine, will light when thrust and rotation have been disabled by DrillLok system.

If operating with Subsite tracking equipment, DrillLok system will be incorporated into tracker. See tracker operator's manual.

If operating without Subsite tracking equipment, DrillLok system will be a separate handheld device. See DrillLok operation sheet.

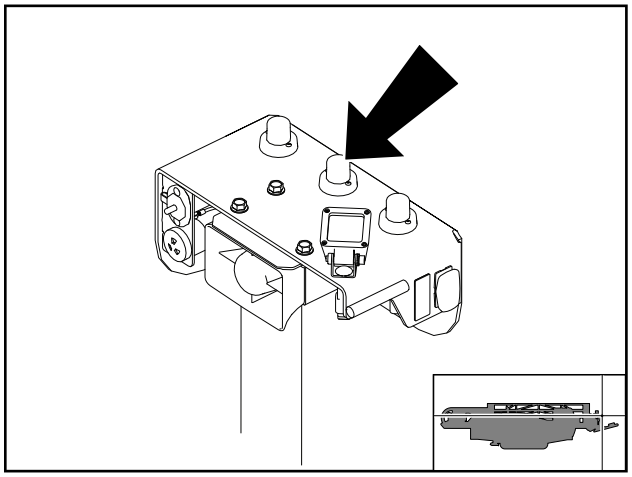

j95om017w22.eps

Electric Strike System

NOTICE: The strike system does not prevent electric strike or detect strikes before they occur. **If alarms are activated, a strike has already occurred** and equipment is electrified.

Electric strike system must be properly set up, tested, and used any time jobsite is classified as electric.

See "Apply Precautions" on page 27. Review safety procedures before each job.

If an electric strike occurs, immediately contact your Ditch Witch dealer to have the electric strike system tested.

Assemble Voltage Detector

1. Drive voltage stake into ground at least 6' (2m) away from any part of system.
2. Clip voltage limiter to voltage stake as shown.

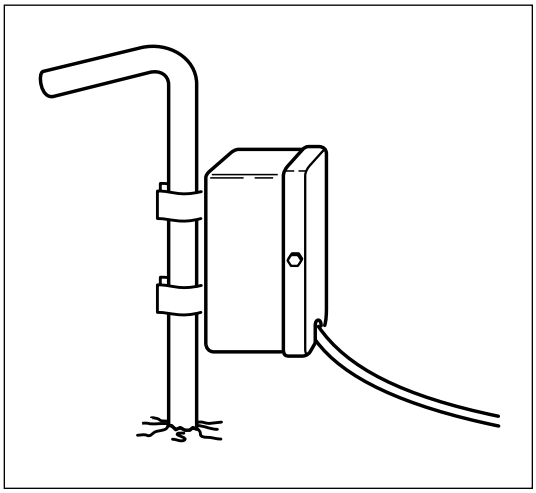
j07om021c.eps

Test Strike System

NOTICE: Do not drill until test is completed successfully.

1. Start engine.
2. Test alarms and strobe. See page 53.
3. View test results and historical data stored in the display. This data includes:
   - ESID bar graph
   - alphanumeric readout showing volts and amps
   - current diagnostic codes, or diagnostic codes detected during previous tests
4. Use Electric Strike Simulator to test voltage and current sensors.

Use ESID Test Tool

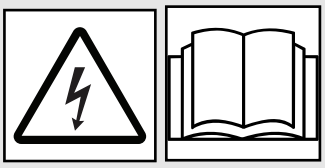

DANGER Electric shock. Contact will cause death or serious injury. Read and understand operator's manual. Know emergency procedures.

To help avoid injury:

- Never touch clips while test tool is operating.
- Never use test cables if probe or cable insulation is cracked or damaged.
- Ensure test tool, cables and hands are dry before operating.
- Ensure test tool is off when setting up test cables.
- Ensure cables are connected properly before testing.

Use the ESID test tool (shown) to test voltage and current sensors on ESID. If readings are less than indicated, contact your Ditch Witch dealer. See test tool operation sheet for more information.

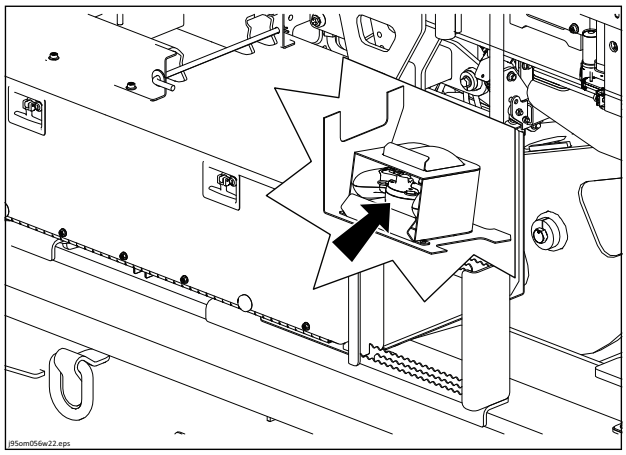

Pipe Loader

Correct Dropped Pipe

To return a dropped pipe to the drill string, shut off machine and manually retrieve pipe using appropriate lifting device.

Correct Misaligned or Jammed Pipe

NOTICE: If misaligned or jammed pipe cannot be corrected by removing bent pipe, contact your Ditch Witch dealer for assistance.

A pop-up message on the display will indicate a misaligned or jammed pipe. Turn engine off and inspect pipe in active row. If drill pipe is bent, remove from pipe box and discard.

Remove/Install Pipe Box

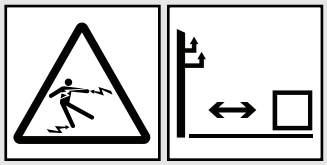

DANGER Overhead electrical lines. Contact will cause death or serious injury. Know location of lines. Stay away.

To help avoid injury: Follow US Occupational Safety and Health Administration (OSHA) guidelines for working around overhead electrical lines.

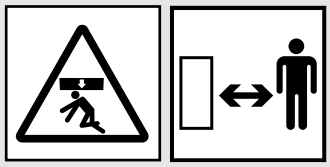

WARNING Lifted load. Crushing can cause death or serious injury. Stay away from lifted load and its range of movement.

To help avoid injury:

- Never attempt to remove/install pipe box while drilling or backreaming.
- Always walk around machine and check for obstructions before moving load.
- Use equipment capable of supporting the equipment's size and weight. See "Specifications" on page 193 or measure and weigh equipment before lifting.
- Never remove pins from ends of pipe box until lifting device is attached. Box may fall if pipe lift switch is pressed without end pins in place.
- Lift only one box of pipe at a time.
- Never take your eyes off moving load. Always look in the direction load is moving.
- Never swing a load over people.
- Always verify that pipe and pipe box retaining pins are placed in correct locations.
- Keep pipe box access steps clean.

NOTICE:

- Lift only one pipe box at a time.
- Before lifting, always inspect all lifting accessories, including pins, for cracks, bending or other signs of wear. If worn or damaged, do not use. Contact your Ditch Witch dealer for replacement parts.

Secure Lower Pipe Box

1. Lift pipe and remove support bars (1) from storage bracket.

   NOTICE: Only lift pipe if upper support bars are installed.

2. Insert each support bar into proper location.
3. Secure with lynch pins (2).

   IMPORTANT: When lynch pins are not in use, pin to split ring on pipe box.

4. Lower pipe onto support bars.

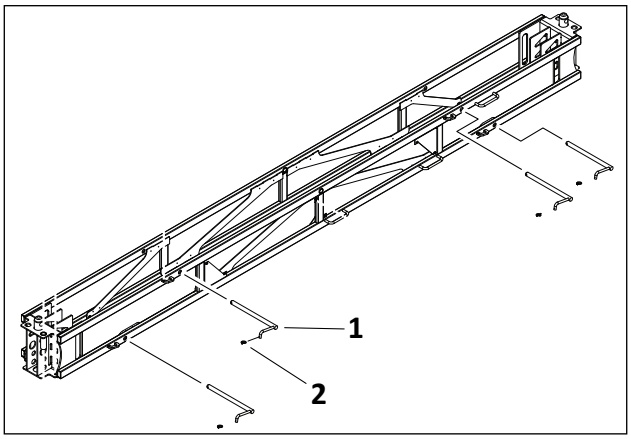

j95om081w22.eps

Prepare Upper Pipe Box

1. Insert support bars (1) into proper location.
2. Secure with lynch pin (2).
3. Brace pipe with upper retention bars (3).
4. Secure with lynch pins (4).

Install Upper Pipe Box

1. Install box lift (5) with bar (6).
2. Secure with lynch pins.
3. Using an appropriate lifting device, and move box into place on pipe loader frames.
4. Insert locking bars (7) in the end of each pipe box.
5. Secure with lynch pins (8).

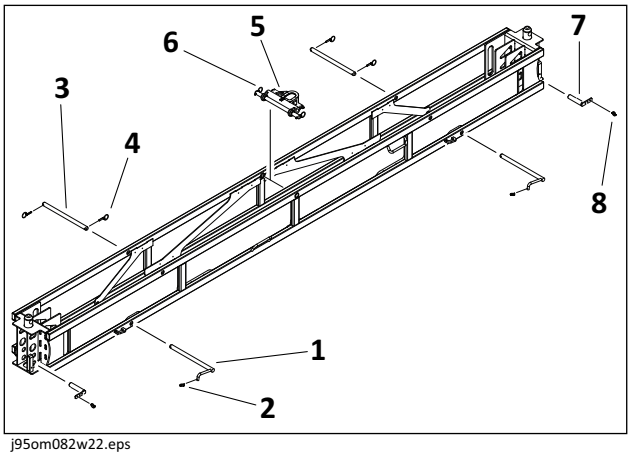

j95om082w22.eps

Move Pipe to Lower Pipe Box

1. Remove support pins from lower pipe box.
2. Ensure shuttles are positioned under first row of pipe.
3. Lift pipe and remove support bars from bottom row of pipe on upper pipe box.
4. Store support bars in brackets.
5. Move pipe from upper pipe box to lower pipe box.
6. Using appropriate lifting device, remove empty upper pipe box.

Move Pipe to Upper Pipe Box

1. Remvoe support bars from upper and lower pipe boxes
2. Lift pipe into upper pipe box.

> ***NOTICE:*** Only lift pipe into upper pipe box if upper retention bars are installed and secured.

3. Install each support bar in appropriate location.
4. Secure with lynch pins.
5. Lower pipe onto support bars.

Rotate Drill Pipe Order

Rotate drill pipes in the drill string weekly. Use pipe boxes in a different order.

Row Select

> ***NOTICE:***
>
> - Do not raise pipe lifters with too many pipes in a row.
> - Shuttle must be extended from under pipe box when row is selected.

Drilling

Change row when row is empty. If automated pipe loader is being used, display will indicate that it is time to select a new row. Use row select buttons to select a new row.

Backreaming

Select next row when active row is full.

Sensor Override

NOTICE: Some automated functions that can protect components from damage are NOT available in sensor override. Use extreme caution when operating in sensor override.

IMPORTANT: Only qualified Ditch Witch service technicians can return machine to normal operation.

Automated functions of this machine are made possible by information collected from many sensors on the machine. Sensor override permits limited operation without automated functions and standard equipment protections when an issue is detected with one or more of the sensors. In sensor override, an operator can complete a bore and move the machine away from the jobsite so that proper repairs can be made at a Ditch Witch dealership.

If a sensor affected by the sensor override has an error and needs attention, a pop-up message will appear on display. Each pop-up message will give the operator the option to override the error. The table below details how automated functions are affected in sensor override.

Pop-Up Message	With Override	Without Override	Cause
Automatic row stop	Pipe loader automation and automatic row change disabled	Row stop will stay in current position	Row select sensor reads out of range Row select motor pulling too much or too little current Row select sensor not detecting movement when row select should be moving
Cab slide sensor	All operations function normally but carriage may run into cab if not extended	Thrust, rotation, and inner rotation are blocked by cab	Cab position is not read correctly by controller
Carriage sensor	High-speed carriage control, pipe loader automation, and distance drilled are disabled	Carriage unable to move and shuttles unable to extend from under pipe box	CAN communications lost Sensor shows carriage is beyond front or rear stop Sensor does not detect movements when carriage should be moving

Pop-Up Message	With Override	Without Override	Cause
Thrust encoder	Coordinated makeup will be performed when overridden with multi-use button and automation disabled Dither and VAM limits during makeup will be disabled	Assisted makeup will not function	CAN communications lost Thrust encoder is not read by the controller Thrust encoder reading out of range
Rotation sensor	Cannot override	Manual carve replaces autocarve and automation is disabled	CAN communications lost Sensor does not detect movement during rotation
Shuttle sensor	Pipe loader automation is disabled	Carriage unable to move and shuttles unable to extend from under pipe box	CAN communications lost Sensor shows shuttle is beyond spindle stop or last row of pipe Sensor does not detect movement when shuttle should be moving

Wireless Remote Control

Set-Up

1. Check wireless remote control battery status. Replace batteries if needed. See "Battery, Wireless Remote Control" on page 168.
2. Ensure USB key (shown) is installed. This key is a lock-out feature to prevent unauthorized use.

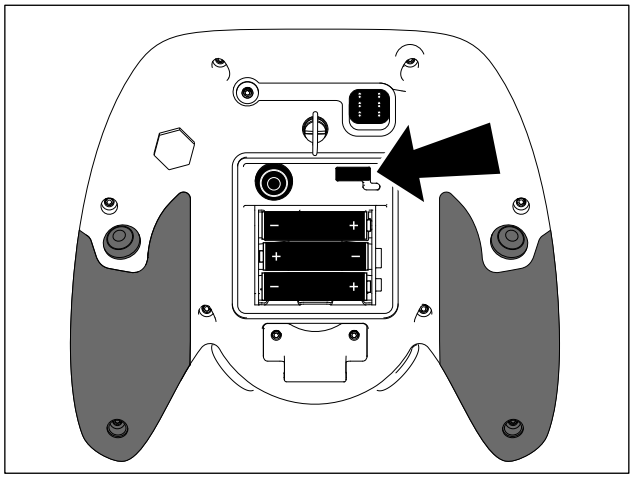

Operation

EMERGENCY STOP: Press engine stop on wireless remote or machine.



WARNING Remote-controlled equipment. Impact can cause death or serious injury. Stay away.

To help avoid injury:

- Never drive while on machine.
- Keep machine in sight at all times when using wireless remote control.
- Keep a safe distance away from machine when operating wireless remote control.
- Ensure bystanders are not near the area where machine will be driven.
- Remove strap from around neck when using wireless remote control near moving parts.

NOTICE: Place wireless remote control in storage box after use. Take care not to store with neck strap on top of switches.

IMPORTANT: Operator station must be empty to operate wireless ground drive control.

1. Turn on wireless remote control. Wireless remote control indicator will light.

   IMPORTANT: Wireless remote control will shut down after one minute of inactivity. Move power/start/horn switch up to restart.

2. Select mode.
3. Operate.
4. Turn wireless remote control off when job is complete.

Pair

NOTICE: If machine does not respond as expected when using wireless ground drive, turn transmitter off and use alternate ground drive controls.

If communication link indicator is flashing yellow, communication between wireless remote control and machine has stopped. Move wireless remote control closer to machine while maintaining a safe distance.

If communication link indicator is red, communication has been lost. Shut down wireless remote control and restart enable communication. If remote still will not work, contact your Ditch Witch dealer.

If battery and communication link indicators both display red for several seconds and then the wireless control shuts off, USB key is not installed.

To pair:

1. Activate accessories.
2. Connect harness (shown) to transmitter (2).
3. Ensure battery indicator is solid green.

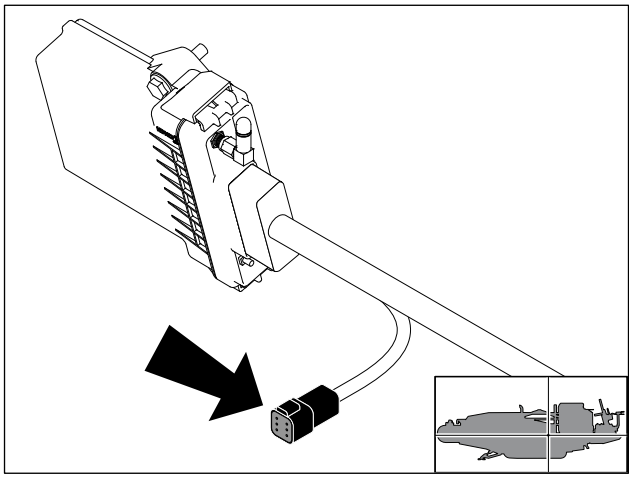

j50om054w.eps

4. Press pairing switch (1) until communication link indicator begins to flash green/yellow and then release the channel switch.
   - Rapid flashing green indicator signals successful channel connection.
   - Flashing yellow indicator signals unsuccessful channel connection.

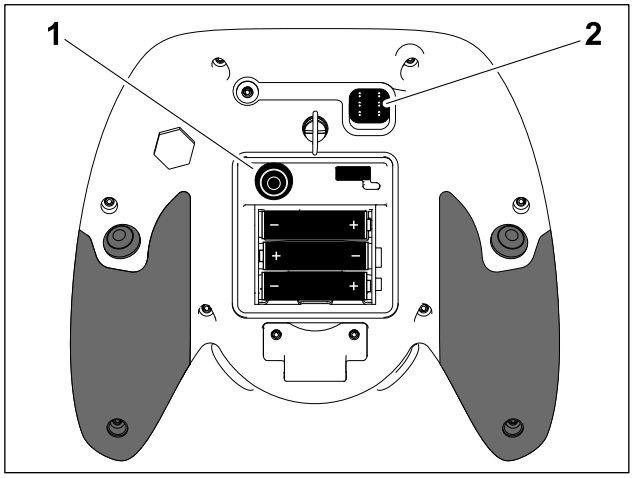

Remote_Channel.eps

Wireline Operation

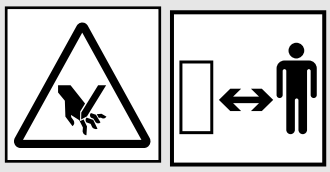

⚠ WARNING Moving parts. Contact can cause serious injury. Stay away.

To help avoid injury:

- Ensure thrust and rotation are disabled or in restricted mode while operation specialist is working at the front and rear of machine.
- Never operate pipe box, pipe loading, anchor, setup controls, or any other controls while wireline operation specialist is making wireline connections.
- Maintain constant two-way communication with wireline operation specialist.

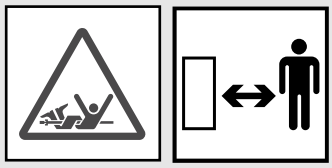

⚠ DANGER Rotating shaft. Crushing will cause death or serious injury. Stay away.

To help avoid injury:

- Ensure thrust and rotation are disabled or in restricted mode while operation specialist is working at the front and rear of machine.
- Never operate pipe box, pipe loading, anchor, setup controls, or any other controls while wireline operation specialist is making wireline connections.
- Maintain constant two-way communication with wireline operation specialist.

IMPORTANT: This section is intended as an overview for the machine operator. During most bores, a wireline operation specialist is responsible for making wireline connections. For specific information about wireline operation, including system operation and safety precautions, consult your wireline operation equipment vendor.

This machine can be modified to operate a wireline operation system by installing optional wireline kit. Wireline operation uses a transmitter in the machine head that is hard wired through the drill string to an offboard computer station at the rear of the machine. Each time pipe is added to the drill string, a new section of wireline is inserted through the new pipe, gearbox, and water swivel, then spliced into the

tracking system. The operator must be aware of the wireline operation specialist's activity at the front and rear of the machine. Contact your Ditch Witch dealer for more information.

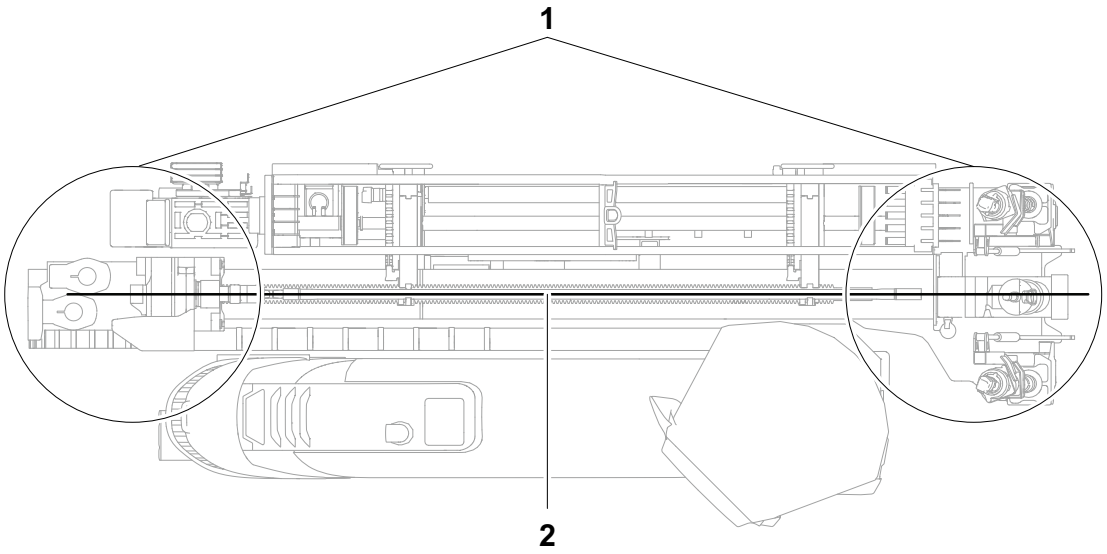

j59om018w.eps

1. Operator awareness zone
2. Wireline

IMPORTANT: See "Wireline Restricted Operating Mode (ROM)" on page 74.

1. Connect drill head, transition sub, and wireline beacon housing.
2. Drill first pipe. After first pipe is downhole, clamp pipe in wrenches.
3. Position next pipe in shuttles.
4. The wireline operation specialist will:
   - 4.1 Turn wireline restricted operating mode (ROM) on to slow thrust and rotation.
   - 4.2 Insert a section of wireline through the pipe in the shuttles.
   - 4.3 Splice one end of the new wire to the wireline in the clamped pipe.
   - 4.4 Insert the other end (rear of machine) through the spindle, gearbox, and water swivel.
5. Use the pipe loading controls to move the new pipe into position and make up the joint.
6. The wireline operation specialist will:
   - 6.1 Remove slack in wireline.
   - 6.2 Secure wireline at the spindle.
   - 6.3 Connect wireline to the offboard computer.
   - 6.4 Turn the wireline ROM switch to the OFF position to enable unrestricted thrust and rotation.
7. Install next new section of pipe.
8. Continue process for duration of bore.

Complete the Job

Chapter Contents



For additional precautions, see "Safety" and "Prepare" chapters.

Rinse Equipment 150

Stow Equipment 151

Store Machine 151

- Store in Freezing Conditions 151
- Store Long-Term 152

Decommission Machine 152

Rinse Equipment



WARNING Pressurized fluid or air. Contact can cause death or serious injury. Refer to operator's manual for correct use.

To help avoid injury:

- Never use high flow when using wash wand.
- Never point or aim wand at yourself or anyone else. Keep nozzle low to the ground.
- Prime drilling fluid pump before operating wash wand. Failure to prime drilling fluid pump will cause flow fluctuations, which will make it difficult to control the wash wand.
- Use only properly rated hoses, fittings, and couplings.
- Do not use the wash wand if hose, couplings, or wand are damaged.

NOTICE:

- Do not spray water onto operator console or electrical center in engine compartment. Water can damage electrical components. Wipe down instead.
- Ensure all mud and debris is rinsed from tracks before parking machine overnight.

1. Turn fluid flow to low.
2. Turn off fluid pump.
3. Connect wash wand at quick connect at rear of machine.
4. Press wash wand switch to close discharge valve.
5. Check surroundings before pressing handle to start pressurized fluid flow.
6. Spray water onto equipment to remove dirt and mud. Some pressure might be needed to remove dried mud from wrench area.

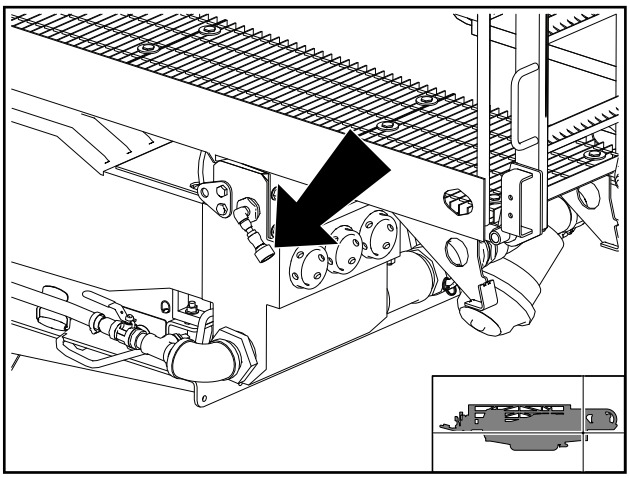

j95om018w22.eps

IMPORTANT: If front wrench is clamped, fluid will not flow to the wash wand.

7. Release handle to stop flow.

Stow Equipment

Ensure all quick wrenches, bits, pullback devices, and other tools are loaded and properly secured on trailer or truck.

Disconnect and store the following hoses and cables (if used):

- electric strike system voltage stake
- fluid hose

Store Machine

Before storing, ensure machine is rinsed, equipment is stowed, and all fluids are filled. For more information on filling fluids, see Maintenance chapter or contact your Ditch Witch dealer.

Store in Freezing Conditions

To store machine overnight in freezing conditions, fill fluid lines with a polypropylene glycol-based, RV antifreeze before shutdown.

Add Antifreeze

1. Add antifreeze to antifreeze tank using funnel. See "Specifications" on page 193.
2. Install plug on suction side of drilling fluid pump.
3. Open valve below antifreeze tank.
4. Install optional antifreeze reclaimer adapter in spindle.
5. Ensure valve is open as shown.
6. Start machine and set to low throttle.
7. Enable drilling fluid control.
8. Slowly turn drilling fluid control until antifreeze comes out of spindle.
9. Disable drilling fluid control.

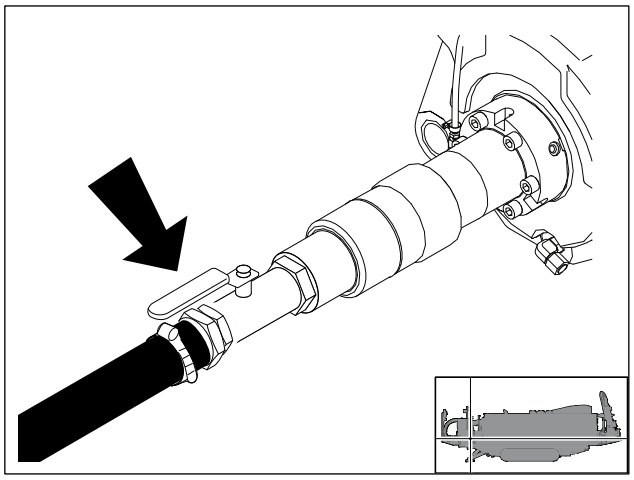

j59om104w.eps

Reclaim Antifreeze

IMPORTANT: Antifreeze can be removed from antifreeze tank and disposed of properly or it can be reused until it is too diluted with drilling fluid to protect against freezing.

1. Hold hose on optional antifreeze reclaimer over top of antifreeze tank.
2. Open valve on reclaimer.
3. Connect drilling fluid transfer hose from tank to drilling fluid pump inlet.
4. Close valve below antifreeze tank.
5. Start engine.
6. Set throttle to low.
7. Enable drilling fluid control.
8. Set drilling fluid control to low.
9. Turn drilling fluid off when drilling fluid comes out of reclaimer hose.
10. Remove antifreeze reclaimer.

Store Long-Term

To store machine for periods of time exceeding two months:

- Ensure exposed parts are treated with anti-rust agent.
- Touch up paint as needed to prevent rusting.
- Lubricate machine and apply grease to unpainted surfaces.
- Cover exhaust pipe.

Decommission Machine

Before decommissioning machine, follow local regulations for disposing of hazardous substances. For more information on draining fluids, see Maintenance chapter or contact your Ditch Witch dealer.

Maintenance

Chapter Contents



For additional precautions, see "Safety Awareness" and "Prepare" chapters.

Maintenance Precautions 154

- Washing Precaution 154
- Welding Precaution 155
- Working under Machine 155

Recommended Lubricants 156

- Engine Oil Temperature Chart 157
- Approved Coolant 157
- Approved Fuel 158
- Diesel Exhaust Fluid 159
- Exhaust Cleaning 160

Drill Maintenance Interval Chart 161

Drill Procedures 164

Downhole Tool Maintenance Interval Chart . . . 191

Downhole Tool Procedures 191

Maintenance Precautions



⚠WARNING Jobsite hazards. Exposure can cause death or serious injury. Use correct equipment and work methods. Use and maintain appropriate safety equipment.

To help avoid injury:

- Wear personal protective equipment including hard hat, safety eye wear, foot protection, hearing protection, and gloves (except when near rotating equipment).
- Remove jewelry.
- Tie back long hair.
- Wear close-fitting, high visibility clothing.
- Have other personal protective equipment, such as insulated boots and gloves, breathing protection, and face shield, etc. available for use depending on jobsite hazards or requirements.

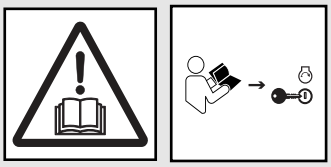

⚠WARNING Misuse of machine can cause death or serious injury. Read and understand operator's manual and all other safety instructions before use. Know how to use all controls.

To help avoid injury:

- Unless otherwise instructed, all maintenance should be performed with the engine off and cool.
- Lower unsecured, raised components before servicing equipment.
- Unless otherwise instructed, all maintenance should be performed with machine parked on level surface.
- Refer to US Occupational Safety and Health Administration (OSHA) guidelines for appropriate lockout-tagout procedures.

Washing Precaution

NOTICE: Water can damage electronics. When cleaning equipment, do not spray electrical components with water.

Welding Precaution

NOTICE: Welding can damage electronics.

- Welding currents can damage electronic components. Always disconnect the ECU ground connection from the frame, harness connections to the ECU, and other electronic components prior to welding on machine or attachments.
- Connect welder ground close to welding point and make sure no electronic components are in the ground path.
- Failure to disconnect battery will cause damage to battery.

Working under Machine

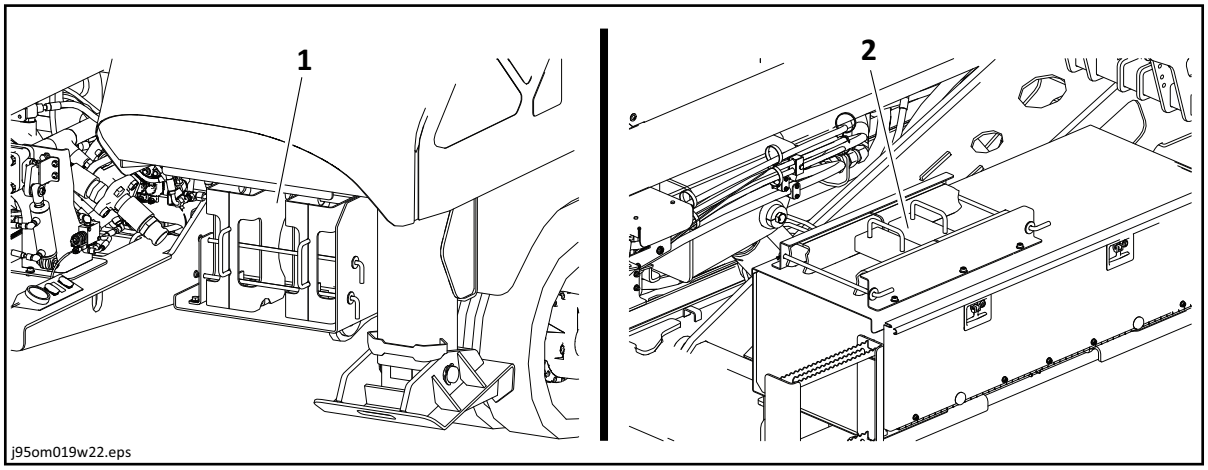

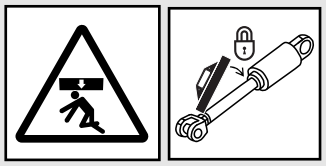

WARNING Raised component. Crushing can cause death or serious injury. Stay away or secure raised component with locking device. Use correct equipment and procedures.

Before working under area of machine supported by stabilizer or frame tilt cylinders, ensure machine is parked on hard surface. Replace cylinder locks or pivot cylinder locks if damaged.

Stabilizer

1. Remove cylinder locks from storage and place over extended cylinder rods (1) with curved ends toward stabilizer shoes.
2. Lower machine until load is supported by cylinder locks.

Frame Tilt Cylinder

1. Remove drill frame support (2) and place under drill frame over pivot cylinder rods.
2. Lower drill frame until load is supported by drill frame support.

Recommended Lubricants

Item	Description
DEAC	Diesel engine antifreeze/coolant meeting CES 14603 See "Approved Coolant" on page 157.
DEF	Diesel exhaust fluid meeting ISO 22241-1 or DIN 70070
DEO	Diesel engine oil meeting or exceeding Cummins® 20081, API CJ-4, ACEA E9. See "Engine Oil Temperature Chart" on page 157. API American Petroleum Institute, ACEA European Automobile Manufacturer's Association
MPG	Multipurpose grease lithium based NLGI GC-LB Grade 2
MPL	Multipurpose gear oil meeting API GL-5 (SAE80W90)
PAG	Polyalkylene glycol oil, Sanden SP-15® oil
PPO	Plunger pump oil, ISO 100 30W. Ditch Witch part numbers: 1 gal (4 L) 255-100011; 5 gal (19 L) 255-10002
THF	Tractor hydraulic fluid, Phillips 66® PowerTran XP Fluid or equivalent
TJC	Tool joint compound, Ditch Witch standard or metal free
WRG	Mulitpurpose extreme pressure water resistant grease, polyurea based NLGI GC-LB Grade 2

Proper lubrication and maintenance protects Ditch Witch equipment from damage and failure. Maintenance intervals listed are for minimum requirements. In extreme conditions, service machine more frequently. Use only genuine Ditch Witch parts, filters, approved lubricants, TJC, and approved coolants to maintain warranty. Fill to capacities listed in "Specifications" on page 193.

For more information on engine lubrication and maintenance, see the engine manual.

Engine Oil Temperature Chart

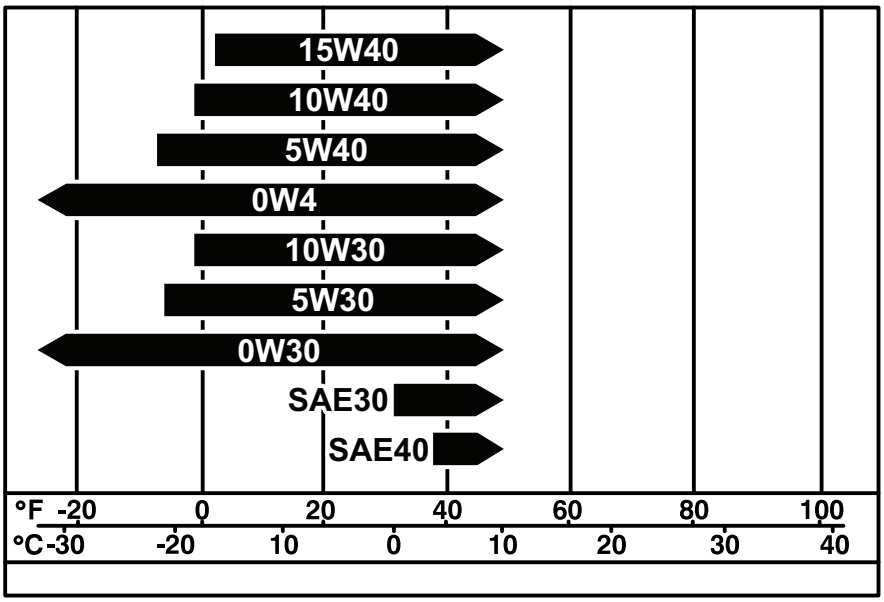

j59om132w.eps

Approved Coolant

NOTICE:

- Use only pre-diluted coolant or concentrated coolant mixed with distilled water. Do not use tap water.
- Using water or high-silicate automotive-type coolant will lead to engine damage or premature engine failure.
- Mixing heavy-duty diesel engine coolant and automotive-type coolants will lead to coolant breakdown and engine damage.

This machine was filled with coolant meeting Cummins CES 14603 (blue in color) before shipment from factory. Add or replace only with coolant meeting this specification, such as Fleetguard® ES Compleat™ coolant. This coolant is available, pre-diluted, from your Ditch Witch dealer as part number 255-1055. Contact your Cummins service partner for a full list of approved coolants meeting CES 14603. In an emergency, non-Cummins approved, heavy duty diesel engine coolant meeting ASTM D6210 may be used. Change to CES 14603 coolant as soon as practical.

Approved Fuel

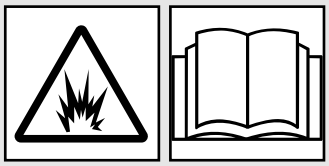

⚠ WARNING Ultra Low Sulfur Diesel (ULSD) poses a greater static ignition hazard than earlier diesel formulations with higher sulfur content. Avoid death or serious injury from fire or explosion; consult with your fuel or fuel system supplier to ensure the delivery system is in compliance with fueling standards for proper grounding and bonding practices.

This engine is designed to run on diesel fuel. Use only high quality fuel meeting ASTM D975 No. 2D, EN590, or equivalent. At temperatures below 32°F (0°C) winter fuel blends are acceptable. See the engine manual for more information.

NOTICE: For **HRC engines only**, use only Ultra Low Sulfur Diesel (less than 15 ppm sulfur content in the US and Canada or 10 mg/kg in EU and Japan) in this machine. Operating with higher sulfur content will damage the engine and aftertreatment device.

Biodiesel blends up to 5% (B5) are approved for use in this machine. The fuel must meet the specifications for diesel fuel shown above. In certain markets, higher blends may be used if certain steps are taken. Extra attention is needed when using biodiesel, especially when operating in cold weather or storing fuel. Contact your Ditch Witch dealer or the engine manufacturer for more information.

Diesel Exhaust Fluid (DEF) - HRC Only



⚠ WARNING Corrosive fluid. Contact can cause death or serious injury. Avoid contact. Wear appropriate gloves. See Safety Data Sheet (SDS) for more information.

To help avoid injury:

- If spill occurs, wipe clean immediately.
- If skin contact occurs, rinse with water immediately.
- If eye contact occurs, seek medical help immediately.
- If ingested, seek medical help immediately.

NOTICE: Shut off machine before adding DEF.

The HRC engine requires diesel exhaust fluid (DEF) to meet emission regulations. Use only high quality DEF meeting ISO 22241-1 or DIN 70070 requirements. Running this engine without DEF will increase exhaust emissions and cause engine to derate. Do not dilute or contaminate DEF or substitute other fluids. Tampering with the DEF system will increase exhaust emissions and cause the engine to derate.

DEF has other common names such as Urea, AUS 32, AdBlue, NOx Reduction Agent, and Catalyst Solution.

DEF freezes at 11.3°F (-11.5°C) but the system is designed to prevent freezing during normal operation. If DEF freezes in the tank when the engine is shut down, the system will quickly thaw DEF when engine is started.

DEF has a limited shelf life. In ideal conditions, maximum expected shelf life is about 18 months. At temperatures higher than 90°F (32°C), DEF will degrade more rapidly. Do not store in direct sunlight.

Storage and transfer equipment must be compatible with DEF. Most materials (especially hoses) are not compatible and will degrade and contaminate DEF. Do not use contaminated DEF. Containers made of polyethylene or polypropylene are recommended.

This machine will consume DEF at a rate of 7-10% of diesel consumption. Many factors affect consumption rate, but a good rule of thumb is to fill the DEF tank every other time the diesel tank is filled.

Exhaust Cleaning - HRC Only

The HRC engine has a Selective Catalytic Reduction (SCR) system that uses a small amount of DEF to convert NOx emissions in the exhaust into nitrogen and water. The SCR system cleans itself automatically, unless it is manually disabled by the operator.

Automatic exhaust cleaning happens during normal machine operation when sensors in the engine determine the need. During an engine exhaust cleaning cycle, engine exhaust can reach high temperatures. When this happens, the high exhaust temperature icon will light.



If the jobsite is in an area where high exhaust temperature might cause a problem, disable exhaust cleaning for the duration of the job and return to automatic cleaning when the job is finished. The exhaust cleaning disabled icon will light and remain on until the system is returned to automatic cleaning mode.



The exhaust cleaning icon will light when the system is disabled and exhaust cleaning cycle is needed.



- The icon will light when an automatic cleaning is needed. If the area will allow it, return the machine to automatic cleaning mode and let it run automatically.
- The icon will flash when a manual cleaning is needed. Set the engine to low throttle with no load and initiate the manual exhaust cleaning cycle. The light will continue to flash until the manual exhaust cleaning cycle is finished (approximately 30 minutes).
- A manual exhaust cleaning cycle is required after automatic exhaust cleaning has been disabled multiple times. If manual cleaning is not done when indicated, the engine will derate.

Drill Maintenance Interval Chart

IMPORTANT: Chart indicates first instance of repeated maintenance procedures. See detailed information below.

▽	Adjust, service, or test	□	Change, initial	○	Lube, initial
▲	Check	■	Change	●	Lube

Service	Startup	10 Hours	50 Hours	250 Hours	500 Hours	1000 Hours	2000 Hours	4500 Hours	As Needed
Air intake system (LRC only)				▲					
Battery		▲							▽
Battery, wireless remote control									■
Coolant		▲					■		
Drilling fluid y-strainer	▲	▲							
Dust ejector valve	▲	▲							
Engine compartment			▲						
Engine drive belt		▲				■			
Filter, air									■
Filter, DEF pump								■	
Filter, DEF tank							■		
Filter, engine oil (see Oil, engine)									
Filter, fuel					■				
Filter, hydraulic			□		■				
Fluid, hydraulic	▲	▲			■				
Fluid pump	▲	▲							
Fluid pump packing nut		▲							

Service	Startup	10 Hours	50 Hours	250 Hours	500 Hours	1000 Hours	2000 Hours	4500 Hours	As Needed
Hydraulic accumulator						■			
Hydraulic hoses	▲	▲							
Hydraulic tank			▽						
Inner water swivel (AT only)									■
Inner drive collar			▲						■
Oil, engine	▲	▲			■				
Oil, fluid pump	▲	▲	□				■		
Oil, fluid pump oiler	▲	▲							
Oil, ground drive gearbox			▲			■			
Oil, heavy duty anchor			▲			■			
Oil, planetary			▲	■					
Oil, pump drive gearbox			▲		■				
Oil, rotation gearbox			▲		□	■			
Pipe auto-lubricator	▲	▲							▽
Pipe guide inserts	▲		▲						■
Pipe loader inserts				▲					
Radiator			▲						▽
Radiator cap					▲				
SaverLok system			▲						■
SaverLok inner drive collar (AT only)			▲						■
Slide wear pads									▲
Thrust rollers			▲						■
Tool joint compound	▲	▲							■

Service	Startup	10 Hours	50 Hours	250 Hours	500 Hours	1000 Hours	2000 Hours	4500 Hours	As Needed
Track support slide pads				▲					
Track tension	▲		▲						▽
Water separator	▲	▲							
Wrench jaw inserts		▲							■

Drill Procedures

Air Intake System

Check piping (shown) every 250 hours. Ensure there are no cracked hoses, loose clamps, or punctures. Tighten or replace parts as needed.

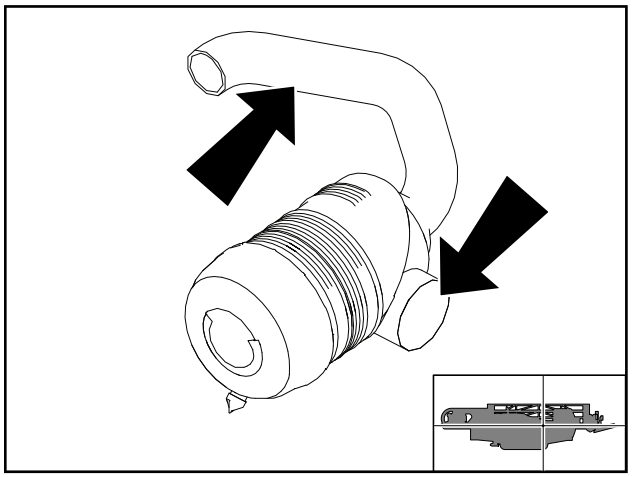

j95om020w22.eps

Battery



WARNING Corrosive fluid. Contact can cause death or serious injury. Avoid contact. Wear appropriate gloves. See Safety Data Sheet (SDS) for more information.

To help avoid injury:

- Never attempt to charge a battery that is leaking, bulging, heavily corroded, frozen, or otherwise damaged.
- Refer to Safety Data Sheet (SDS) for additional information regarding battery.

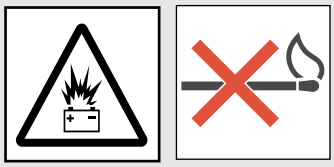

WARNING Explosive hydrogen gas. Fire or explosion can cause death or serious injury. Keep heat flames, sparks, and other sources of ignition away.

To help avoid injury:

- Use a single 12V maximum source for charging. Never connect to rapid chargers or dual batteries.
- Never lean over battery when making connections.
- Never allow vehicles to touch when charging.
- Never short-circuit battery terminals for any reason or strike battery posts or cable terminals.
- Refer to Safety Data Sheet (SDS) for additional information regarding battery.

NOTICE:

- Electronic components can be easily damaged by electrical surges. Jump starting can damage electronics and electrical systems, and is not recommended. Try to charge the battery instead. Use quality large diameter jumper cables capable of carrying high currents (400 amps or more). Low quality cables may not allow enough current flow to charge a dead/discharged battery.
- Read all steps thoroughly and review illustration before performing procedure.

Check every 10 hours. Charge as needed.

Check

1. Disconnect battery at battery disconnect switch, if equipped.
2. Ensure no ignition sources are near battery.
3. Loosen and remove battery cable clamps carefully, negative (-) cable first.
4. Clean cable clamps and terminals to remove dull glaze.
5. Check for signs of internal corrosion in cables.
6. Connect battery cable clamps, positive (+) cable first.
7. Tighten any loose connections.
8. Ensure that battery tiedowns are secure.
9. Turn battery disconnect, if equipped, on.

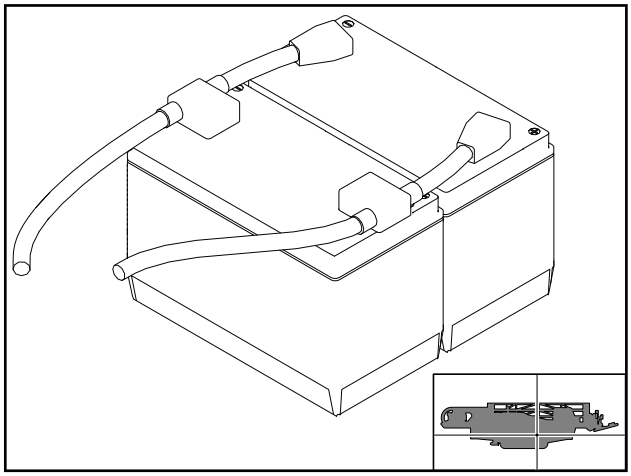

j95om021w22.eps

Charge

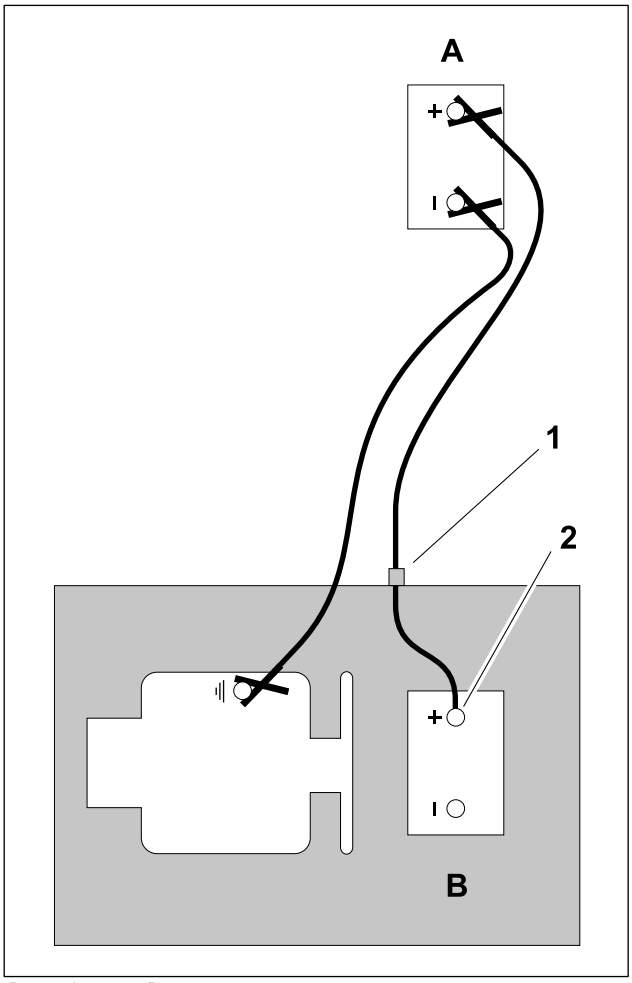

Battery_Jumpstart_B.eps

1. Park service vehicle close to disabled machine but do not allow vehicles to touch.
2. Set parking brake in both, if equipped.
3. Turn both off.
4. Disconnect machine controller.
5. Inspect battery in disabled machine (B) for signs of cracking, bulging, leaking, or other damage.
6. Connect red positive (+) jumper cable clamp to positive (+) post of battery (2) in disabled machine.

   IMPORTANT: Some machines may have a positive jumper cable terminal located externally (1). If so equipped, connect red positive (+) jumper cable clamp to terminal.

7. Connect the other red positive (+) jumper cable clamp to positive (+) post of battery (A) in service vehicle.
8. Connect black negative (-) cable clamp to negative (-) post of battery in service vehicle.
9. Connect the other black negative (-) cable clamp to engine or frame ground on disabled vehicle (1), at least 12" (305 mm) from failed battery, as shown.
10. Operate service vehicle engine at 1500-2000 rpm for a few minutes to build an electrical charge in failed battery.
11. Stop engine in service vehicle.
12. Remove jumper cables from service vehicle, black negative (-) clamp first. Do not allow clamps to touch.
13. Remove black negative (-) cable clamp from disabled engine or frame ground.
14. Remove red positive (+) cable clamp from disabled machine.
15. Reconnect machine controller.
16. Start disabled machine.

Battery, Wireless Remote Control

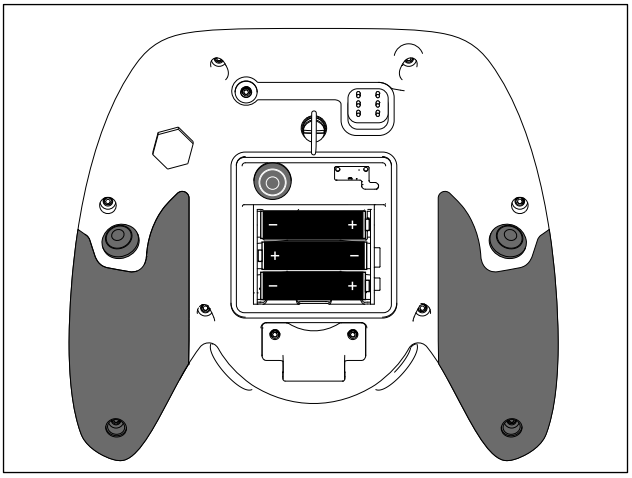

Remote_Battery.eps

Change batteries when low battery indicator is displayed. Install six AA batteries as shown.

Recycle or dispose of used battery properly. See battery manufacturer's instructions for more information.

IMPORTANT: Always remove battery before long-term storage.

Coolant

IMPORTANT: See "Approved Coolant" on page 157.

Check every 10 hours. Change every two years or 2000 hours.

Check

1. Check level at sight glass (1) of expansion tank.
2. Add DEAC at fill (2) as needed to keep level at halfway point on sight glass.

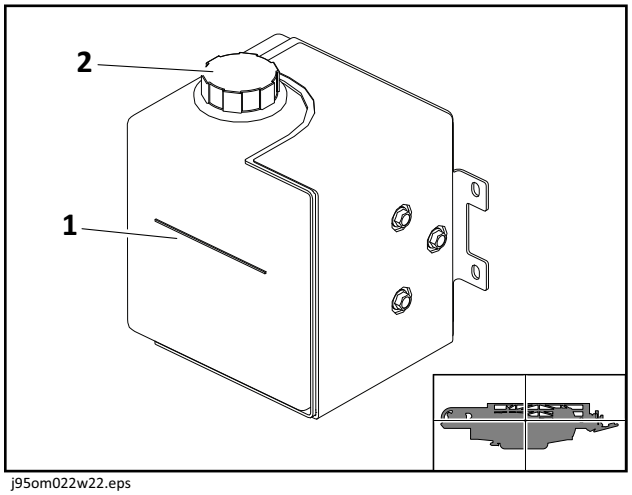

j95om022w22.eps

Change

1. Remove fill cap.
2. Remove plug to drain.
3. Install plug.
4. Add coolant at fill until the level remains steadily in the upper sight glass for 1 minute.
5. Start engine.
6. Run engine until coolant reaches 190°F (87.8°C).
7. Shut off machine and allow to cool.
8. Check coolant level.
9. Add coolant until level is at top of sight glass.

Drilling Fluid Y-Strainer

Check y-strainer before startup and every 10 hours. Ensure y-strainer is free of obstructions and operates properly. Clean as needed.

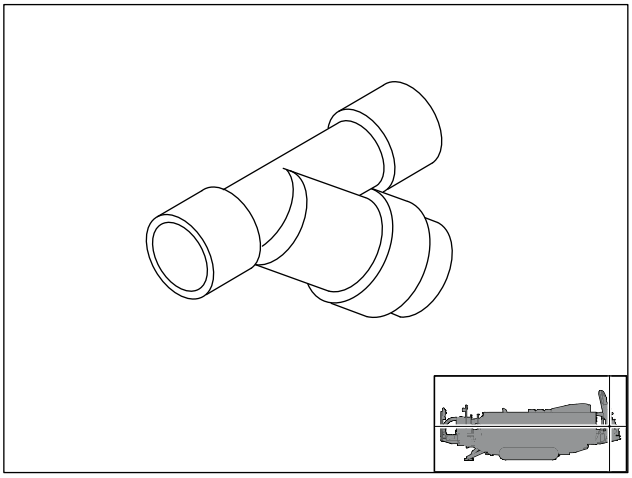

j59om027w.eps

Dust Ejector Valve

Check valve (shown) before startup and every 10 hours. Ensure valve is not inverted, damaged, plugged, or cracked.

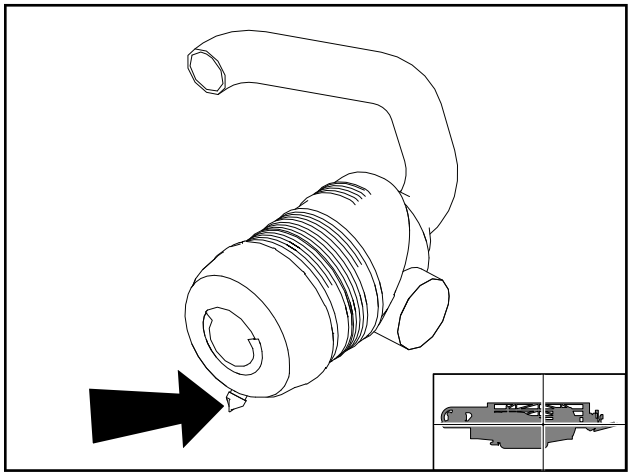

j95om024w22.eps

Engine Compartment

NOTICE:

- Check more often if operating in large brush or grassy conditions.
- Do not use water or compressed air to remove debris.

Check engine compartment (shown) for debris every 50 hours and after long-term storage. Manually clean out debris as needed.

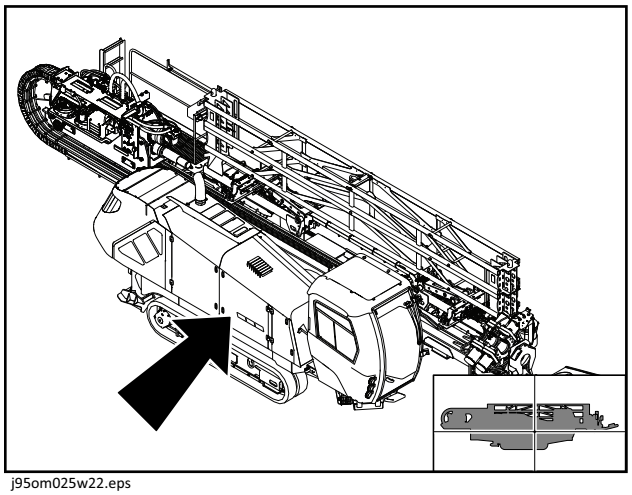

j95om025w22.eps

Engine Drive Belt

Check every 10 hours. Change every 1000 hours.

Check

Check belt (2) for cracks and wear. If damaged, change belt.

Change

1. Remove tension at pulley (3).
2. Remove belt.
3. Inspect engine belt tensioner (1) for damage and debris. Replace if needed.
4. Install new belt.

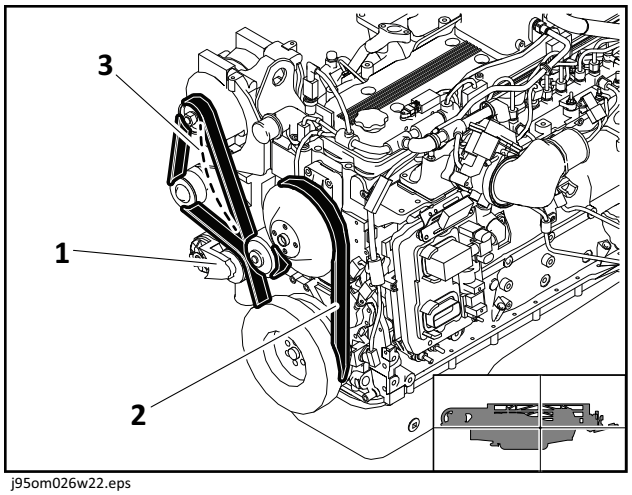

j95om026w22.eps

Filter, Air

NOTICE:

- Only open air filter canister when air restriction is indicated.
- Change elements. Do not attempt to clean them.
- Cleaning with compressed air or water can damage filter elements.
- Tapping filter elements to loosen dirt can damage filter elements.

Change as indicated by display (HRC) or as indicated by air intake restriction indicator (LRC).

1. Remove cover.
2. Remove primary filter element (1) and secondary filter element (2).
3. Wipe inside of housing and wash cover.
4. Install new filter elements.
5. Install cover and secure.
6. Reset air intake restriction indicator (3, LRC only).

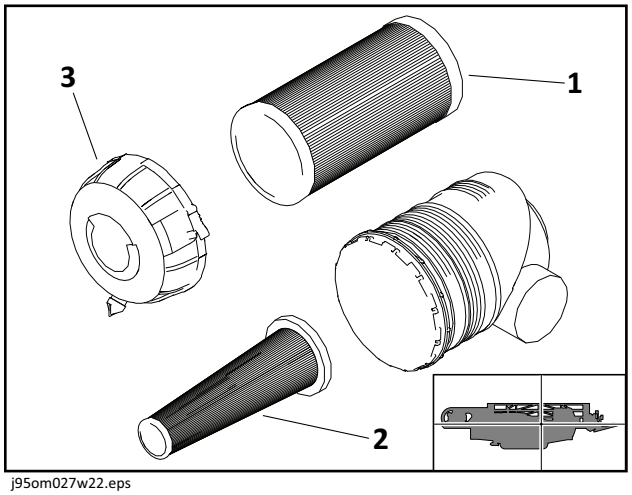

j95om027w22.eps

Filter, DEF Pump

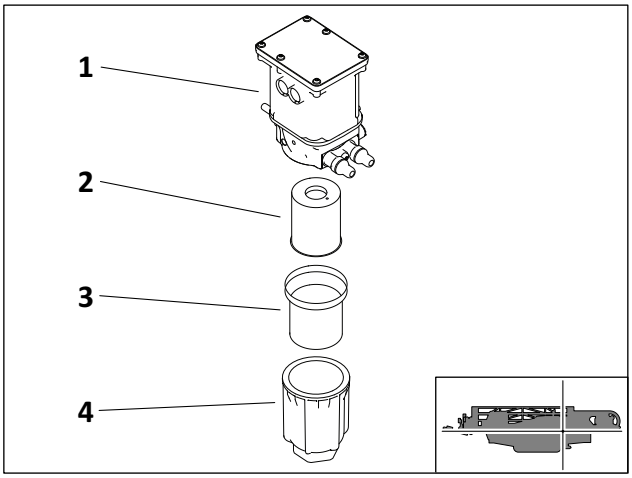

j95om077w22.eps

Change every three years or 4500 hours.

1. Remove DEF filter housing (1).
2. Remove frost protection membrane (3) and discard.
3. Remove filter element (2) from case (1) and discard.
4. Wipe with clean lint-free cloth.
5. Inspect dosing unit threads. If threads are damaged, replace entire DEF unit.
6. Ensure frost protection membrane groove is clean and free of debris. Clean as needed using clean, damp cloth, warm water, and a mild detergent.
7. Clean new dosing unit filter housing and threads using warm water and a clean cloth.
8. Slide new filter element into dosing unit. Ensure it is fully seated.
9. Install frost protection membrane.

> ***NOTICE:*** Frost protection membrane must sit completely in groove of pump housing.

10. Lube threads on pump housing and sealing bead of frost protection membrane.

> ***NOTICE:*** Only use lubricant provided with filter.

11. Install filter housing. Tighten to 80 N•m (59 ft•lb).

Filter, DEF Tank

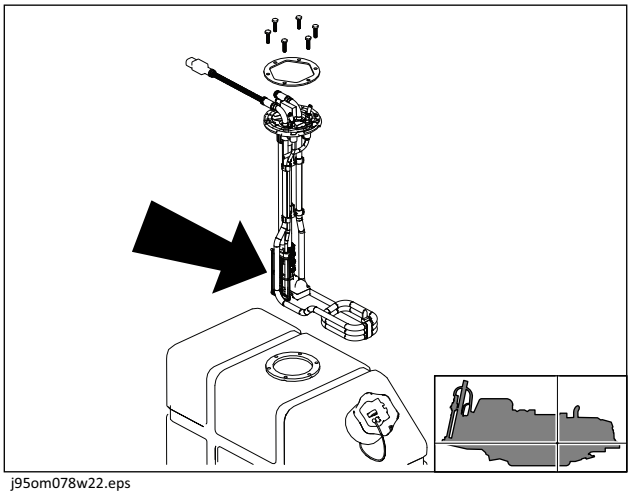
j95om078w22.eps

Change every 2000 hours.

1. Remove clip from inlet port of DEF tank filter.
2. Remove DEF tank filter.
3. Install o-ring on tank pickup tube.
4. Insert new DEF tank filter inlet port into DEF tank pickup tube.
5. Install clip over notch of inlet port.

Filter, Fuel

Change filters (shown) every 500 hours.

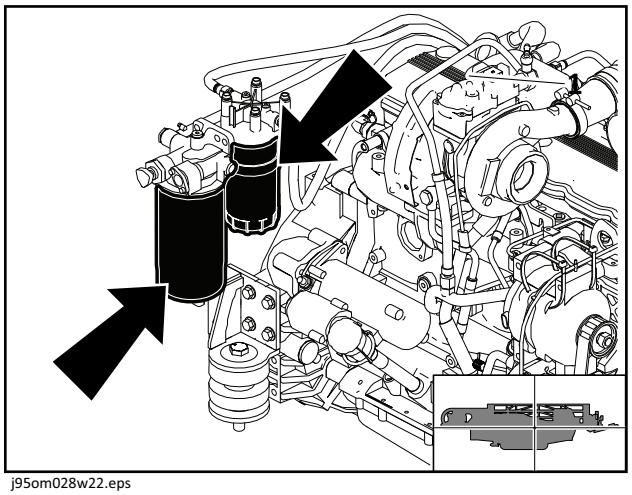

j95om028w22.eps

Filter, Hydraulic

NOTICE:

- Change filter more often as indicated by filter indicator.
- If hydraulic system must be opened for repair, install new hydraulic filter. If new filter becomes plugged in fewer than 20 hours, replace.

Change filters at 50 hours and every 500 hours thereafter.

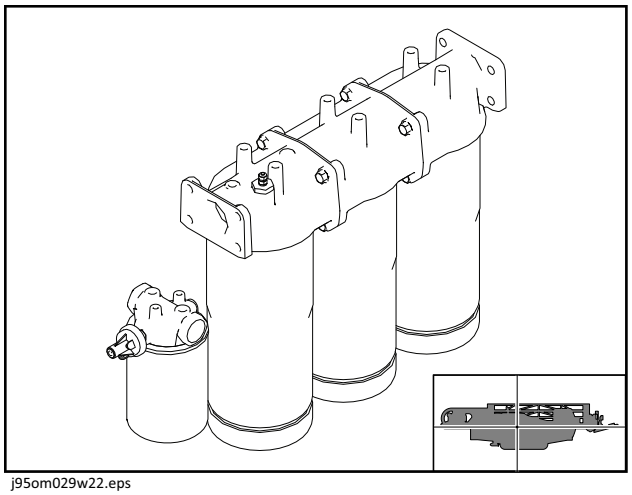

j95om029w22.eps

Fluid, Hydraulic

IMPORTANT: Replace hydraulic filter each time hydraulic system is opened.

Check before startup and every 10 hours. Change every 500 hours.

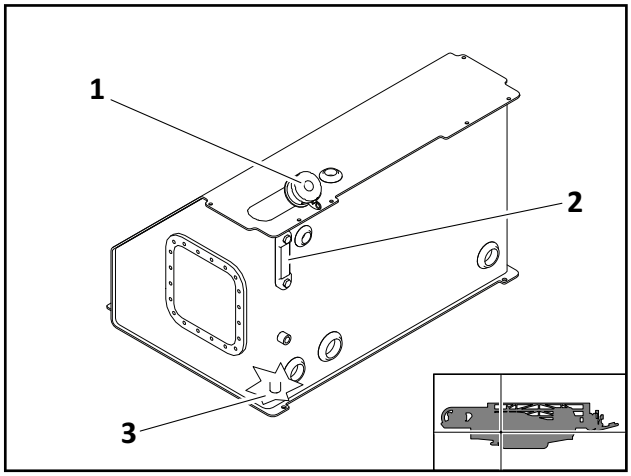

j95om031w22.eps

Check

1. Check level at sight glass (2).
2. Add THF at fill (1) as needed to keep level at halfway point on sight glass.

Change

1. Remove plug (3) to drain.
2. Replace plug.
3. Add THF at fill as needed to keep level at halfway point on sight glass.

Fluid Pump

Check ball valve (1) for leaks every 10 hours. Tighten stem packing as needed.

Check plunger seals (2) and valve (3) for signs of excessive leaking before startup and every 10 hours. Tighten or replace as needed.

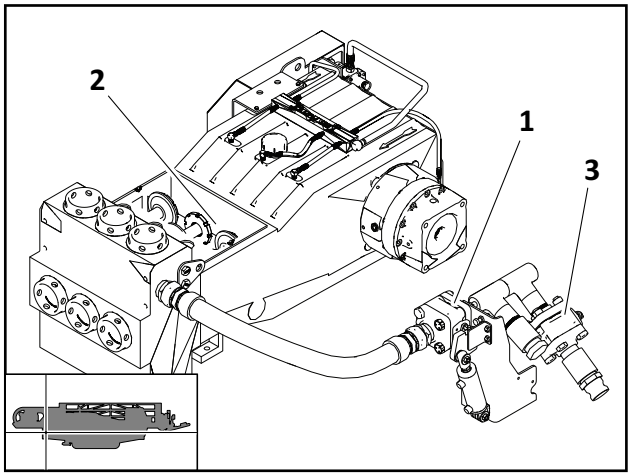

j95om030w22.eps

Fluid Pump Packing Nut

Check packing nut (3) for excessive leaking every 10 hours.

1. Remove bolts (1).
2. Remove panel (2).
3. Loosen set screws (6).
4. Remove cylinder (4).
5. Remove plate (5).
6. Check valve and tighten 1/8 turn as needed.

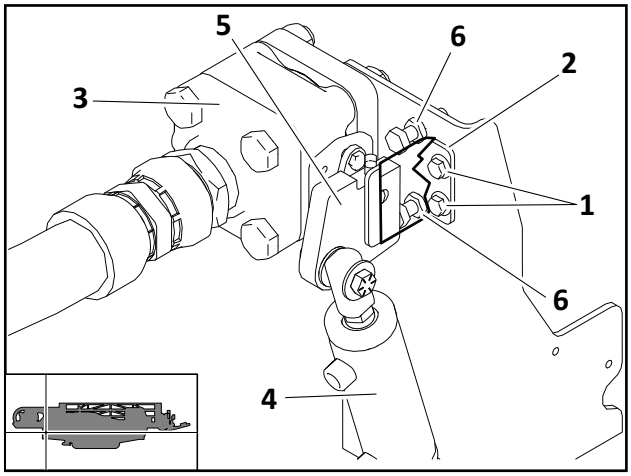

j95om076w22.eps

Hydraulic Accumulator

Change accumulator (shown) every 1000 hours.

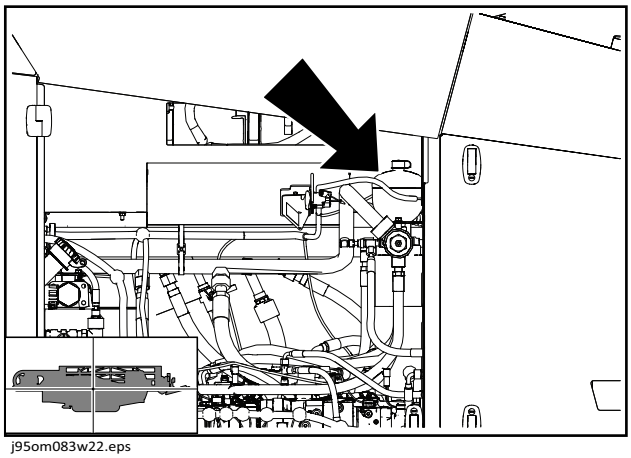
j95om083w22.eps

Hydraulic Hoses



WARNING Pressurized fluid or air. Injection can cause death or serious injury. Refer to operator's manual for correct use.

To help avoid injury:

- Use a piece of cardboard or wood, rather than hands, to check for leaks.
- Before disconnecting a hydraulic line, turn engine off and operate all controls to relieve pressure.
- Contact your Ditch Witch dealer for assistance with relieving trapped pressure.
- Lower, block, or support any raised component with a hoist.
- Cover connection with heavy cloth and loosen connector nut slightly to relieve residual pressure. Catch all fluid in a container.
- Before using system, check that all connections are tight and all lines are undamaged.
- If you are injured, seek immediate medical attention from a doctor familiar with this type of injury.

Check for leaks where shown before startup and every 10 hours.

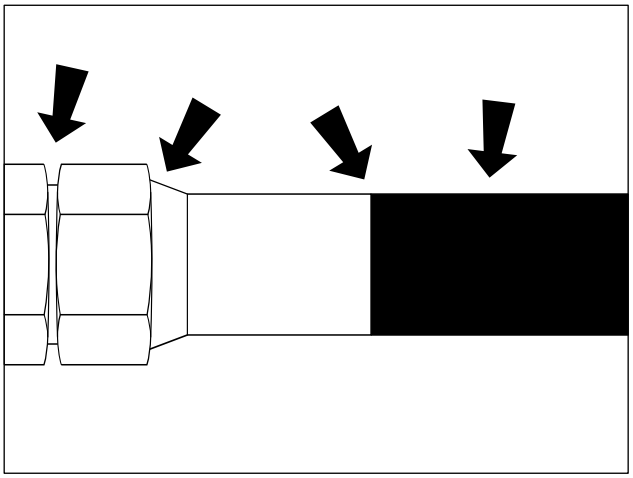

CheckHoses.eps

Hydraulic Tank

Check every 50 hours. Drain water from tank every 50 hours.

1. Turn plug (shown) slightly until water comes out.
2. Tighten plug.

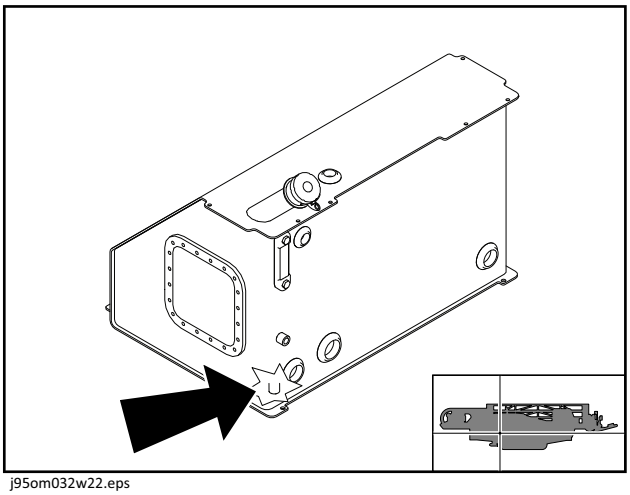
j95om032w22.eps

Inner Drive Collar

Check every 50 hours. Change as needed.

Check

Shine flashlight into spindle and check condition of hex stub (4). Change as needed.

Change

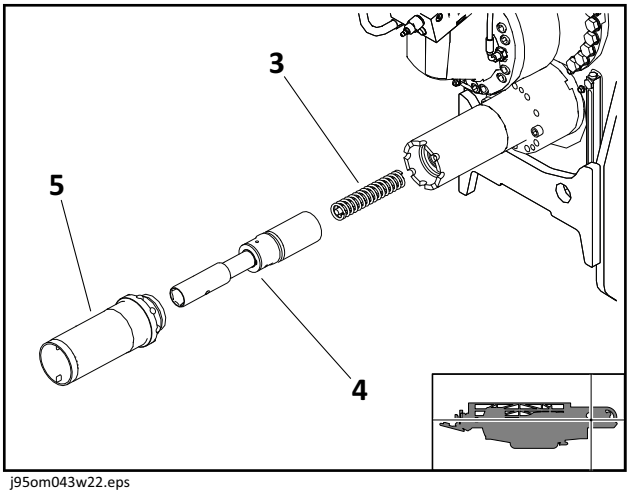

j95om043w22.eps

1. Remove saver sub or SaverLok (5) from connection. See "Saver Sub System" on page 186.
2. Remove hex stub (4).
3. Remove spring (3) from drive shaft.
4. Inspect hex stub. Replace if needed.
5. Inspect spring. Replace if needed.
6. Install saver sub. See "Saver Sub System" on page 186.

Inner Water Swivel

Check

Check condition every 50 hours. Change as needed.

Change

1. Remove saver sub/SaverLok (1). See "Saver Sub System" on page 186.

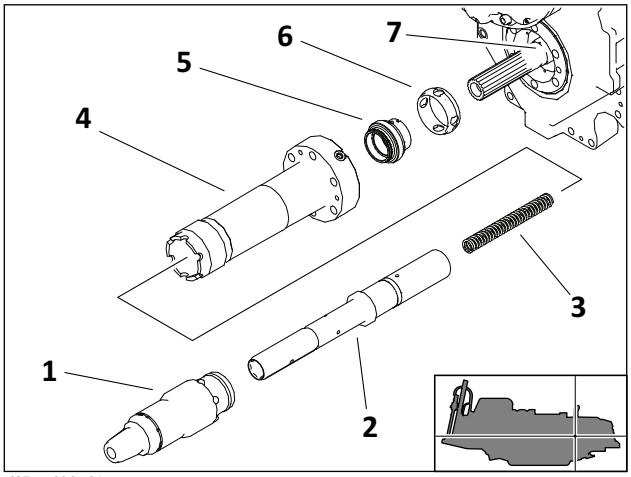

j87om026w21.eps

2.

Saver Sub	SaverLok
2.1 Remove bolts.	2.2 Remove hex stub (2). 2.1 Remove spring (3).

3. Remove saver sub/SaverLok connection (4).
4. Remove small and large seal bodies (5).
5. Ensure fit up piece (6) is aligned.
6. Inspect set screw (7). Replace if needed.

IMPORTANT: Thread new set screw fully into different hole using Loctite 242 or equivalent.

7. Replace seal bodies.

IMPORTANT:

- Ensure seal faces are clean and free of debris during installation. Use caution to avoid damaging faces.
- Lightly coat seals with SAE30 engine oil.
- Ensure small seal body is aligned with set screw.

8. Install saver sub connection.
9. Install spring.
10. Install hex stub.
11. Install saver sub. See "Saver Sub System" on page 186.

Oil, Engine

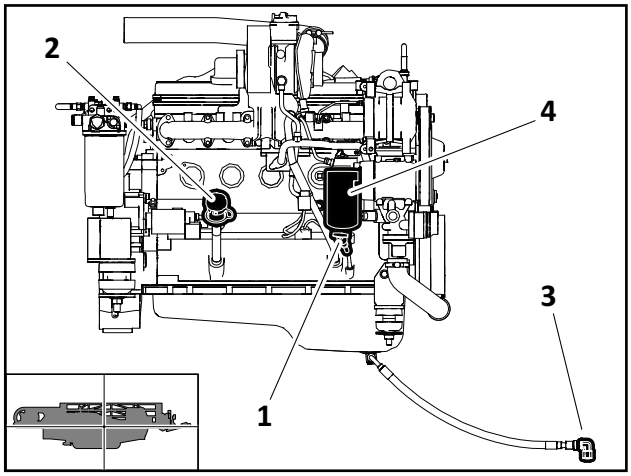

j95om033w22.eps

Check before startup and every 10 hours. Change every 500 hours.

Check

1. Check level at dipstick (1).
2. Add DEO at fill (2) as needed to keep level at highest line on dipstick.

Change

1. Remove plug (3) to drain.
2. Install plug.
3. Change filter (4).
4. Add DEO at fill to keep level at highest line on dipstick.
5. Start engine.
6. Run engine until operating temperature is reached.
7. Shut off machine.
8. Check level.
9. Add DEO at fill as needed to keep level at highest line on dipstick.

Oil, Fluid Pump

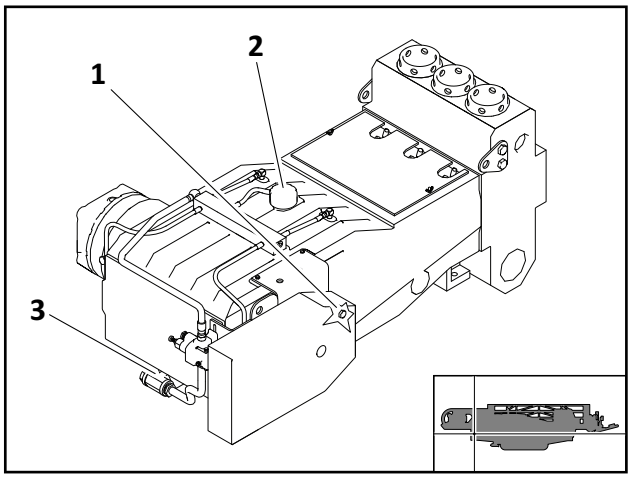

j95om034w22.eps

Check oil in power end before startup and every 10 hours. Change at 50 hours and every 2000 hours thereafter.

Check

1. Check level at sight glass (1).
2. Add MPL at fill (2) as needed to keep level at halfway point on sight glass.

Change

1. Remove plug (3) to drain.
2. Ensure plug is free of dirt and debris.
3. Install plug.
4. Add MPL at fill plug to keep level at halfway point on sight glass.

Oil, Fluid Pump Oiler

Check before each use and every 10 hours. Add fluid as needed to keep level at halfway point or higher.

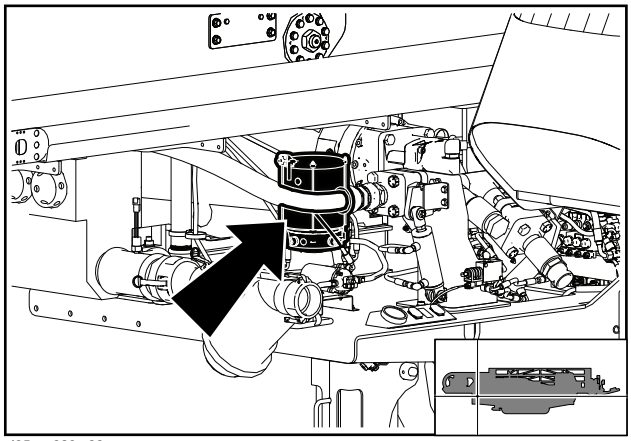
j95om089w22.eps

Oil, Ground Drive Gearbox

IMPORTANT:

- Use helper to assist in positioning gearbox plugs for checking and adding oil.
- Do not fill more than halfway.

Check every 50 hours. Change every 1000 hours.

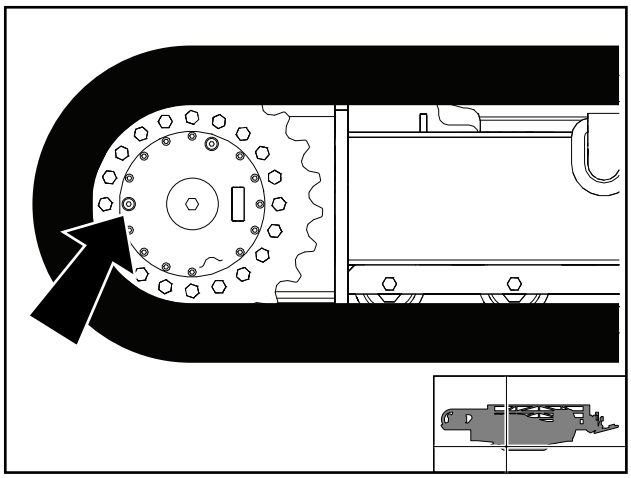
j95om035w22.eps

Check

1. Rotate gearbox until plug (shown) is level with center of track.
2. Remove plug.
3. Add MPL at fill as needed to keep level visible.
4. Repeat for each gearbox.

Change

1. Rotate gearbox until plug is level with bottom of track.
2. Remove plug to drain.
3. Rotate gearbox until plug is level with center of track.
4. Add MPL at fill to keep level visible.
5. Install plug.
6. Repeat for each gearbox.

Oil, Heavy Duty Anchor

Check every 50. Change every 1000 hours.

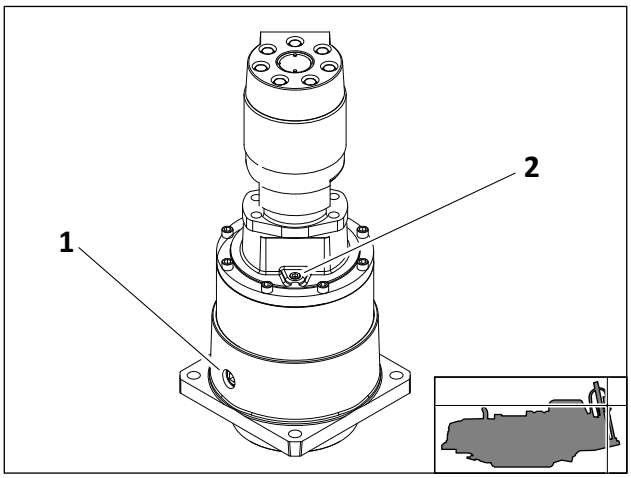

j95om079w22.eps

Check

1. Check level at fill (2).
2. Add MPL at fill as needed.

Change

1. Remove plug (1) to drain.
2. Install plug.
3. Add MPL at fill.

Oil, Planetary

Check oil every 50 hours. Change every 250 hours.

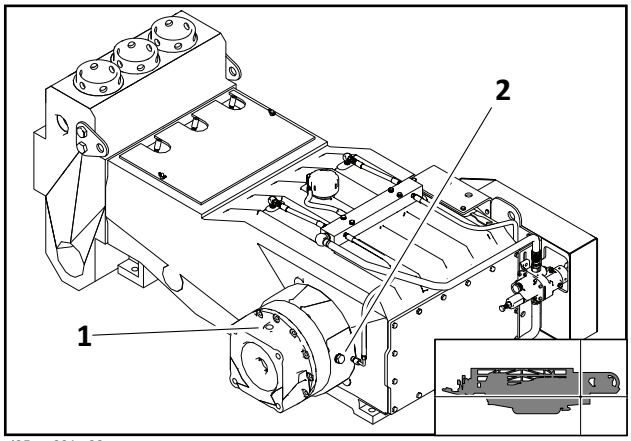

j95om091w22.eps

Check

1. Check level at fill (1).
2. Add MPL at fill as needed.

Change

1. Remove oil at fill.
2. Add MPL until oil comes out of plug (2).
3. Install plugs.

Oil, Pump Drive Gearbox

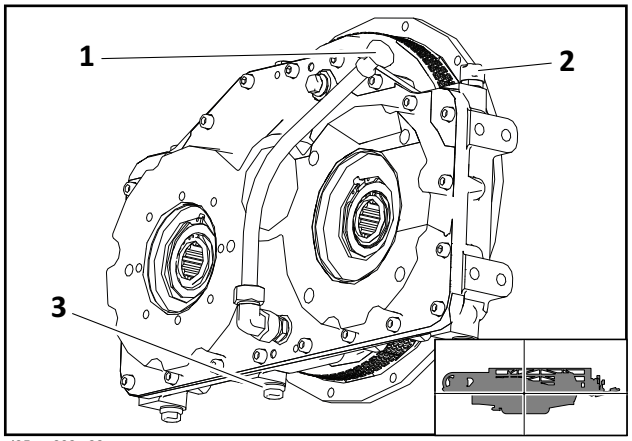

j95om092w22.eps

Check every 50 hours. Change at 500 hours.

Check

1. Check level at dipstick (1).
2. Remove breather plug (2) and add MPL as needed to keep level at highest line on dipstick.
3. Install breather plug.

Change

1. Remove plug (3) to drain.
2. Install plug.
3. Remove breather plug and add MPL as needed to keep level at highest line on dipstick.
4. Install breather plug.

Oil, Rotation Gearbox

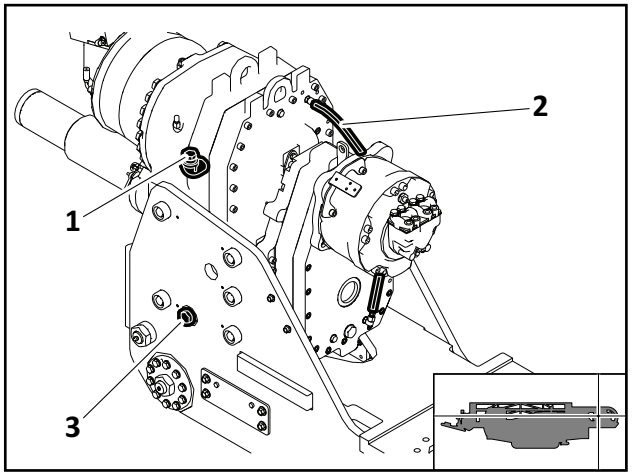

j95om036w22.eps

Check every 50 hours. Change at 500 hours and every 1000 hours thereafter.

Check

1. Check level at sight tube (2).
2. Add MPL at fill (1) as needed to keep level at halfway point on sight tube.

Change

1. Remove plug (3) to drain.
2. Install plug.
3. Add MPL at fill to keep level at halfway point on sight tube.

Pipe Auto-Lubricator

Check before startup and every 10 hours. Clean as needed.

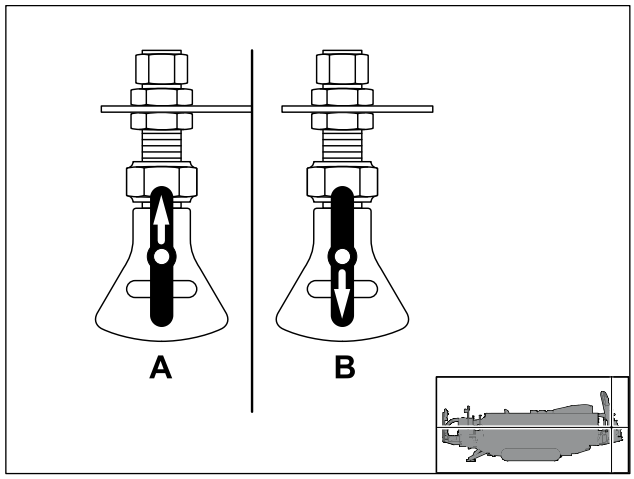

j59om025w.eps

Check

Ensure that nozzle is free of obstructions and operates properly.

Clean

1. Rotate handle upward to the clean position (A).
2. Operate pump until obstruction is flushed.

> ***NOTICE:*** If neoprene washer is dislodged while cleaning, entire nozzle must be replaced.

3. Rotate handle down to the spray position (B).
4. Clean nozzle guard. If necessary, pull handle/nozzle insert out of housing to clean with fine wire or solvent.

Pipe Guide Inserts

IMPORTANT: Inserts can be rotated for longer wear.

Check before startup and every 50 hours. Change as needed.

Check

Check for wear.

Change

To replace front pipe guide inserts:

1. Remove lynch pins.
2. Remove bars and open pipe guide (1).
3. Remove guide inserts (2).
4. Replace in reverse order.

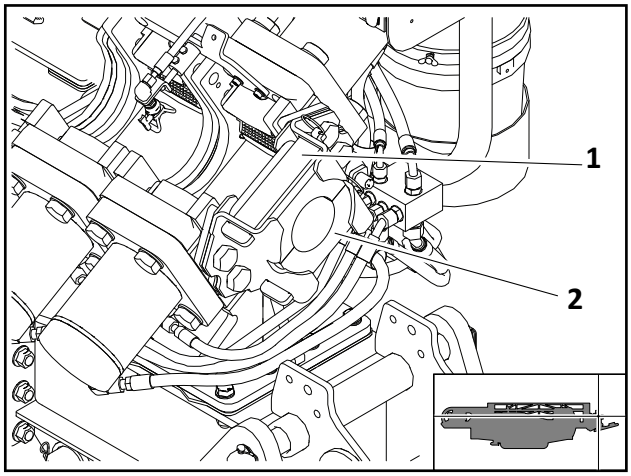

j95om037w22.eps

Pipe Loader Inserts

IMPORTANT:

- Gripper inserts can be flipped over for longer wear.
- Ensure bolts are tightened evenly to enable inserts to slide freely and wear evenly.

Check where shown for wear every 250 hours. Change as needed.

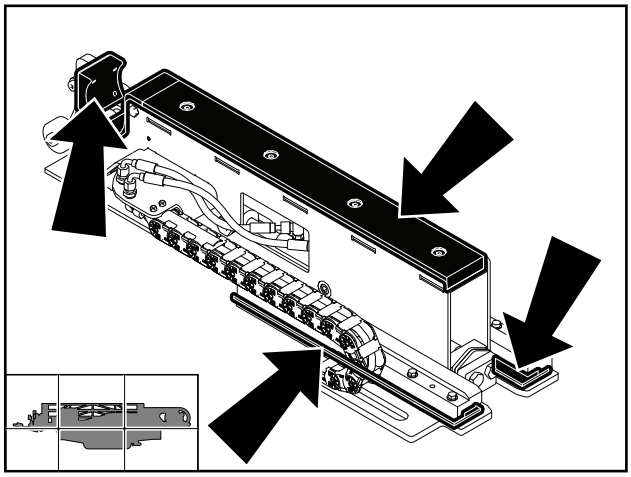
j95om038w22.eps

Radiator

NOTICE: Radiator may need to be cleaned more frequently in dusty or grassy conditions.

Check every 50 hours. Clean as needed.

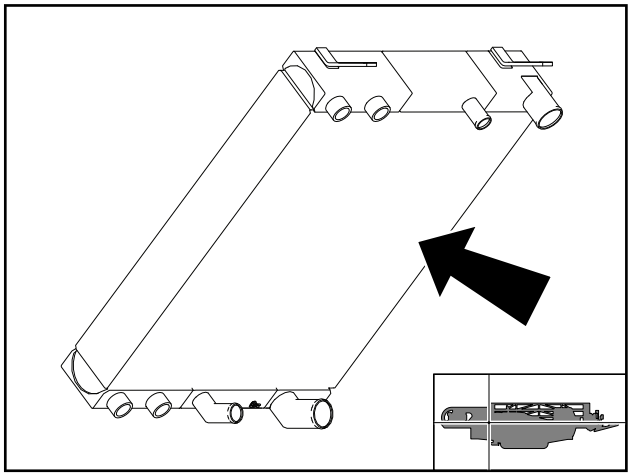
j95om039w22.eps

Check

Check radiator (shown) for dirt, grass, and other debris.

Clean

1. Clean fins with compressed air or spray wash.

NOTICE: Cleaning with high pressure air or water can damage fins.

2. Open rear hood and spray through radiator toward engine.
3. If grease and oil are present on radiator, spray with solvent and allow to soak overnight.

Radiator Cap



⚠ CAUTION Hot parts. Contact can cause burns. Only touch when cool or wear gloves.

To help avoid injury: Wait for machine to cool before inspecting radiator cap.

Inspect radiator cap (shown) every 500 hours. Ensure rubber seal is not damaged. Replace as needed.

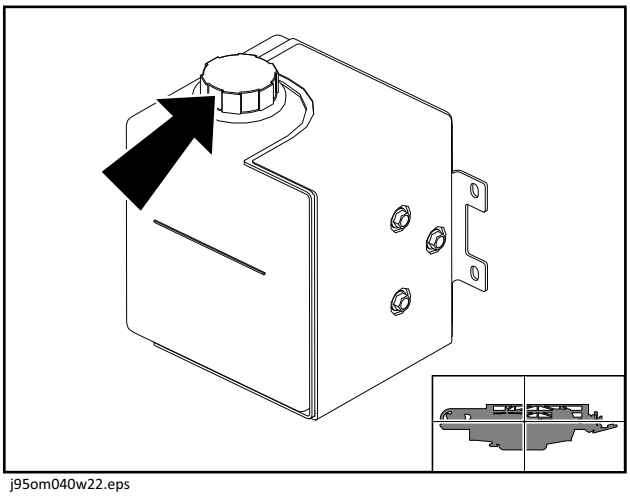
j95om040w22.eps

Saver Sub System

Check every 50 hours. Change as needed.

Change

1. Remove bolts (1).
2. Remove flange (2) and body.
3. Remove and replace o-ring as needed.
4. Reuse the flange to attach the body.
5. Apply hydraulic fluid or Loctite® 242 to threads.
6. Install bolts and tighten in a crisscross pattern to 240 ft•lb (325 N•m).

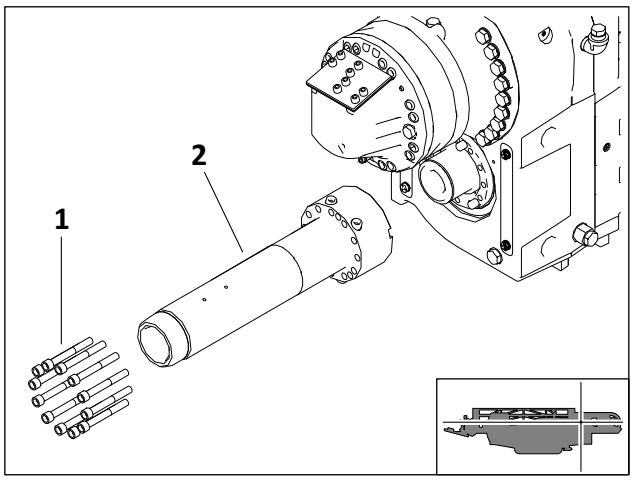

j95om061w22.eps

SaverLok System

Check and lube every 50 hours. Change as needed.

Check

Check wrench collar and sliding output shaft. Lube with EPS every 50 hours.

Change

1. Remove bolts (4) from flange (3).
2. Remove flange and SaverLok body (2) from connection.

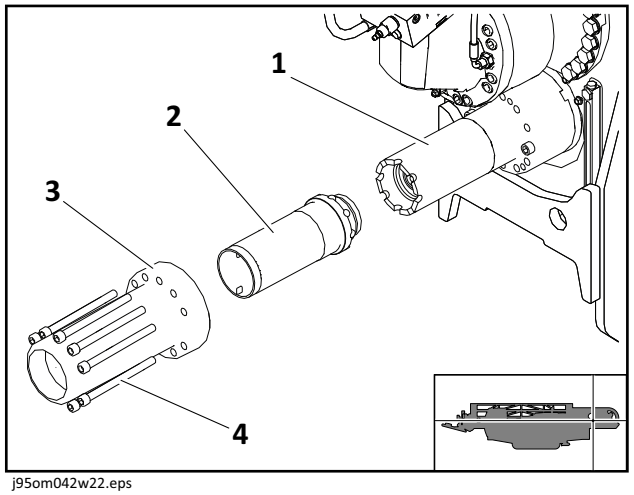

j95om042w22.eps

3. Reuse flange to attach SaverLok body. Install bolts and tighten in a crisscross pattern. Tighten to 240 ft•lb (325 N•m).

Slide Wear Pads

IMPORTANT: Slide cartridge wear pads only need to be checked if a roller has recently been replaced.

Check pads when a roller is replaced. Replace as needed.

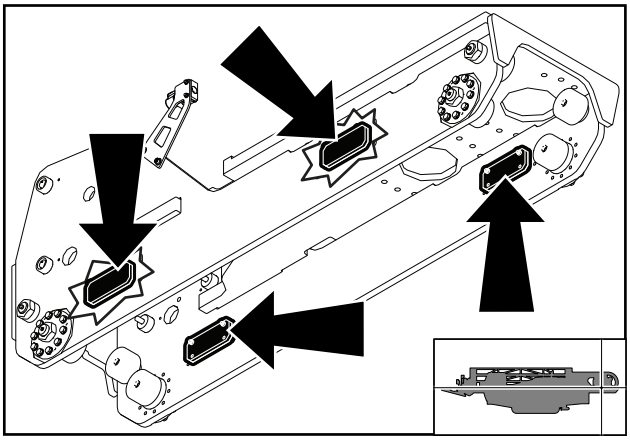

j95om090w22.eps

Thrust Rollers

Check rollers at each end of carriage (shown) every 50 hours. Ensure rollers turn freely. Replace as needed.

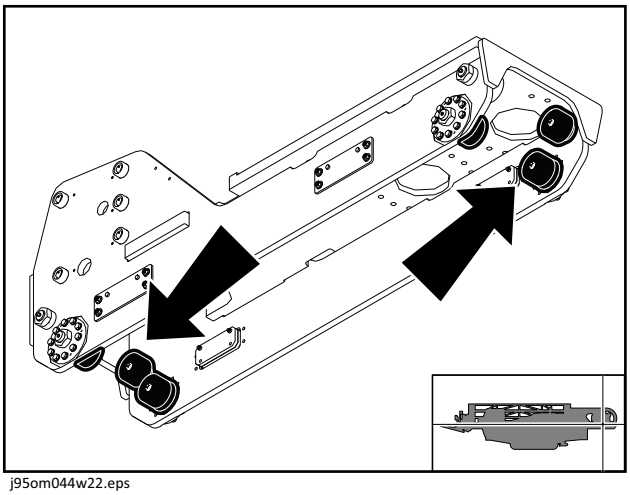

j95om044w22.eps

Tool Joint Compound

NOTICE: Use only genuine Ditch Witch TJC to maintain warranty.

Check before startup and every 10 hours. Change as needed.

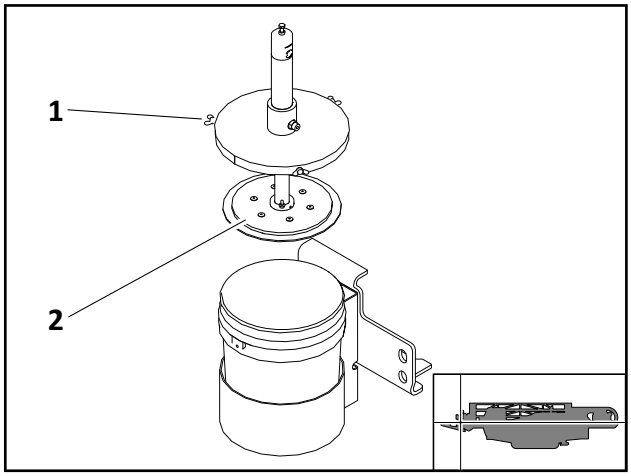

j95om045w22.eps

Check

Check TJC level.

Change

1. Remove TJC pail.
2. Lift pump and lid assembly (1) and secure on shoulder bolt.
3. Remove follower plate (2) from existing pail.
4. Install follower plate into new pail.
5. Press firmly onto follower plate until TJC comes up in center opening.
6. Remove pump and lid assembly from shoulder bolt and lower into pail, guiding pump into center hole of follower plate.
7. Secure TJC pail to pump.
8. Remove cap from discharge tee on pump.
9. Operate pump until discharged TJC is free of air pockets.
10. Replace cap.

Track Support Slide Pads

Check every 250 hours. Change as needed.

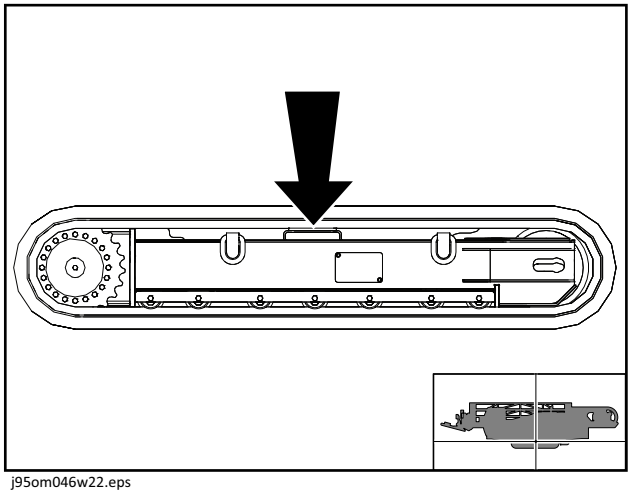
j95om046w22.eps

Track Tension



WARNING Contents under pressure. Impact can cause death or serious injury. Relieve pressure before opening.

To help avoid injury:

- Service track grease cylinder only while standing away from zerk.
- Cover connection with heavy cloth when relieving pressure in cylinder.

Check before startup and every 50 hours. Adjust as needed.

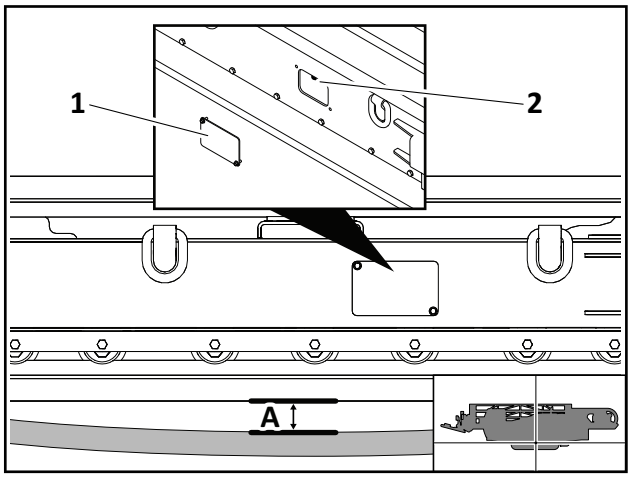

j95om047w22.eps

Check

1. Lift track.
2. Place straightedge across front track span from idler to sprocket as shown.
3. Measure distance from top edge of bottom of track to straightedge (A). Distance should be 0.25-0.375" (6.35-9.53 mm).

Adjust

NOTICE: Use provided pressure gauge.

1. Remove cover (1).
2. Adjust tension.
   - To tighten, pump MPG into fitting (2) so distance is 0.25-0.375" (6.35-9.53 mm).
   - To loosen, use socket wrench to remove zerk and plug and drain all grease. Then follow tightening procedure above.
3. Drive straight forward one machine length and check tension.

Water Separator

Check water separator (shown) located on fuel filter before startup and every 10 hours. Drain water as needed until fuel runs from drain.

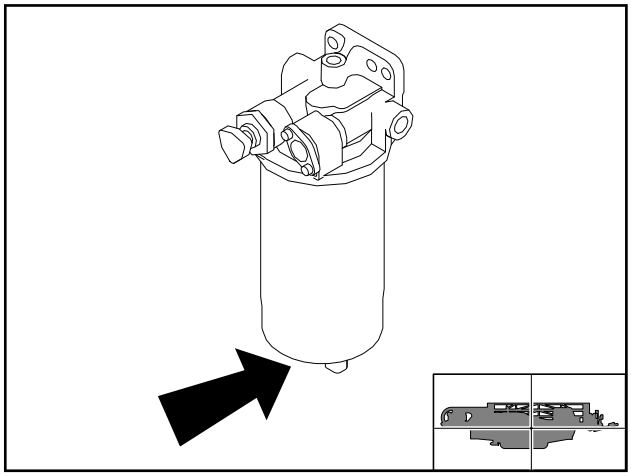

j95om048w22.eps

Wrench Jaw Inserts

Check inserts (shown) before each use. Change as needed.

Check

Check for wear before each use.

Change

1. With wrenches open, remove bolt and washer.
2. Remove inserts.
3. Install new inserts.

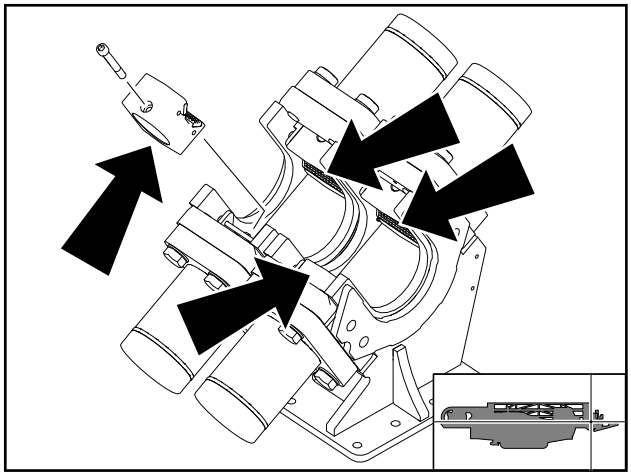

j95om049w22.eps

Downhole Tool Maintenance Interval Chart

IMPORTANT: Chart indicates first instance of repeated maintenance procedures. See detailed information below.

▽ Adjust, service, or test	□ Change, initial	○ Lube, initial
▲ Check	■ Change	● Lube

Service	Each Use	125 Hours
Rockmaster tool	●	▽

Downhole Tool Procedures

Lube Rockmaster Tool

Lube before each use.

1. Remove plugs (2) from tool body and install zerk (1).
2. Inject 20-40 pumps WRG into zerk.
3. Remove zerk and reinstall rear plug.

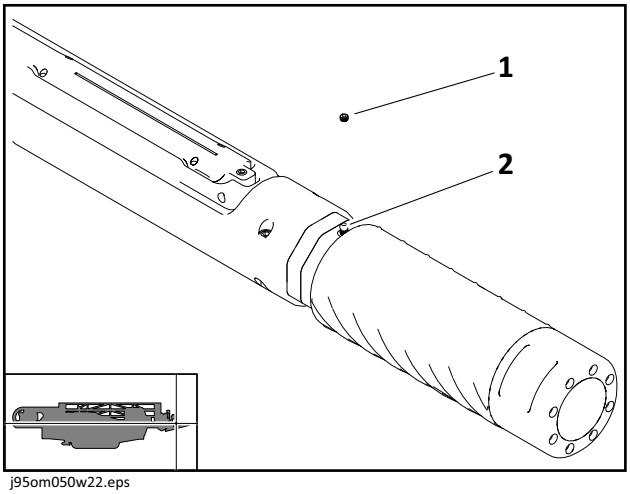

j95om050w22.eps

Rebuild Rockmaster Tool

Rebuild tool every 125 hours as measured by inner rotation hourmeter. Contact your Ditch Witch dealer for replacement parts.

Specifications

Chapter Contents

JT/AT120 194

EU Declaration of Conformity 198

UK Declaration of Conformity 199

JT/AT120

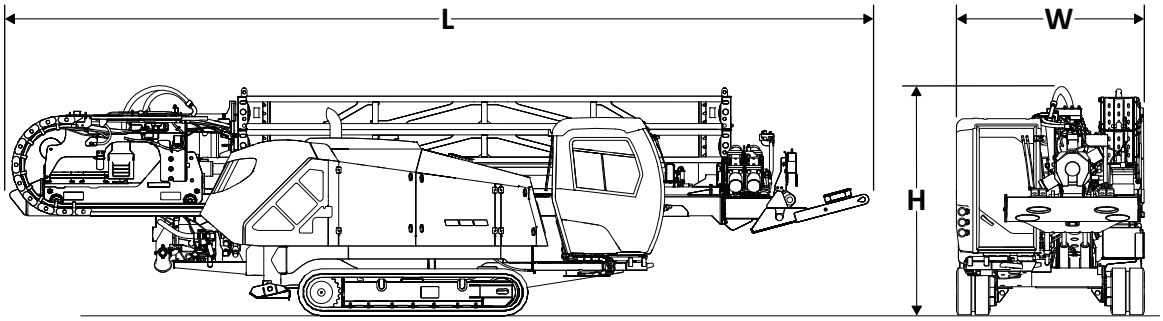

j95om002w22.eps

Dimensions		US	Metric
L	Overall machine length		
	Driving w/ stake plate*	453 in	11.5 m
	Transport w/o stake plate*	410.0 in	10.4 m
W	Overall machine width w/cab	100.4 in	2.55 m
H	Overall machine height		
	Driving w/cab*	122 in	3.1 m
	Transport w/cab*	114 in	2.9 m
Operating mass			
	HRC JT base unit, no pipe*	39,285 lb	17 819 kg
	HRC AT base unit, no pipe*	40,260 lb	18 262 kg
	HRC JT unit, cab, stake plate, 2 full pipe boxes*	47,186 lb	21 403 kg
	HRC AT unit, cab, stake plate, 2 full pipe boxes*	49,891 lb	22 630 kg
Maximum entry angle*		12-18°	12-18°
Angle of approach		17°	17°
Angle of departure		17°	17°
Anchor plate		990 lb	449 kg

Power Pipe HD	US	Metric
Length, nominal*	240 in	6.09 m
Joint diameter*	4.38 in	111.2 mm

Power Pipe HD	US	Metric
Tubing diameter*	3.95 in	100 mm
Minimum bend radius*	205 ft	62.5 m
Weight*	285 lb	129 kg

AT Power Pipe	US	Metric
Length, nominal*	240 in	6.09 m
Joint diameter*	4.38 in	111.2 mm
Tubing diameter*	3.95 in	100 mm
Inner rod diameter*	1.62 in	41.4 mm
Minimum bend radius*	205 ft	62.5 m
Weight*	381 lb	173 kg

Operation	US	Metric
Maximum spindle speed*	190 rpm	190 rpm
Maximum spindle speed (AT inner spindle)*	230 rpm	230 rpm
Maximum spindle torque	15,500 ft•lb	21 015 N•m
Maximum spindle torque (AT inner spindle)	3000 ft•lb	4067 N•m
Carriage thrust travel speed*	210 fpm	64 m/min
Carriage thrust travel speed*	210 fpm	64 m/min
Thrust force*	120,000 lb	533.8 kN
Thrust force (AT mode)*	120,000 lb	533.8 kN
Pullback force*	120,000 lb	533.8 kN
Bore diameter	6.5 in	165 mm
Bore diameter, AT	6.5-8.5 in	165-216 mm
Backreamer diameter	soil dependent	
Ground travel speed, forward*	2.8 mph	4.6 km/h
Ground travel speed, reverse*	2.8 mph	4.6 km/h
Fluid pump crank case capacity	44 qts	41.6 L
Lubrication pump capacity	1.21 gal	4.5 L

Engine		**US**	**Metric**
Engine: Cummins QSB6.7			
	Fuel	Diesel	
	Cooling medium	Liquid	
	Injection	Direct	
	Aspiration	Turbocharged and charge air cooled	
	Cylinders	6	
Displacement		409 in^3	6.7 L
Bore		4.21 in	107 mm
Stroke		4.88 in	124 mm
Manufacturer's gross power rating, HRC (per SAE J1995)		280 hp	209 kW
Manufacturer's gross power rating, LRC (per SAE J1995)		280 hp	209 kW
Estimated net power rating (per SAE J1349)		270 hp	201 kW
Rated speed		2200 rpm	2200 rpm
Emissions compliance (HRC)		EPA T4	EU Stage V
Emissions compliance (LRC)			EU Stage II

Drilling Fluid System (Onboard)	**US**	**Metric**
Maximum drilling fluid pressure*	1100 psi	76 bar
Maximum drilling fluid flow*	285 gpm	1079 L/min

Fluid Capacities	**US**	**Metric**
Hydraulic reservoir	39 gal	148 L
Fuel tank	120 gal	454 L
Engine oil, including filter	18.5 qt	17.5 L
Antifreeze tank	20 gal	76 L
Diesel exhaust fluid tank (HRC only)	12.2 gal	46.3 L

Battery (2 used)
SAE reserve capacity 175 min, 12V, negative ground, SAE cold crank @ 0°F (-18°C), 950 amps.

Environmental	**US**	**Metric**
Regulation (EU) 2024/573: This product contains fluorinated greenhouse gases if equipped with a cab.		
Type: HFC-134a		
Global Warming Potential Factor (GWP): 1430		
Capacity	2.62 lb	1.19 kg
CO_2 equivalent	3747 lb	1.702 t

Vibration Levels	
Operator hand/arm	2.5 m/s^2
Operator whole body	0.5 m/s^2

Noise Level	
Exterior sound power per ISO 6393	106 dBa
Operator sound pressure per ISO 6394 (cab)	76 dBa
Actual noise emission in jobsite conditions could be different. Always wear appropriate hearing protection when operating the machine.	

*Per SAE J2022
**Per ISO 16754

Specifications are called out according to SAE recommended practices. Specifications are general and subject to change without notice. If exact measurements are required, equipment should be weighed and measured. Due to selected options, delivered equipment may not match that shown.

EU Declaration of Conformity

The Charles Machine Works Inc., PO Box 66, 1959 West Fir Avenue, Perry, Oklahoma, USA, declares that the following unit(s):

Model	Serial Number	Description
XXXXX	XXXXXXXXXXXXXXXX	Horizontal Directional Drill

Conform(s) to the following directives:

2006/42/EC (Machinery Directive), 2014/30/EU (Electromagnetic Compatibility Directive), and
2000/14/EC (Noise Emission Directive)

Each model listed has been evaluated with the following standards and/or other normative documents:

EN 16228-1:2014
EN 16228-3:2014
EN ISO 13766-1:2018

Data for 2000/14/EC Noise Emission Directive:

Model	Classification	Measured Sound Power (dBA)	Guaranteed Sound Power (dBA)	Engine Speed (rpm)	Engine Power (kW)
XXXXX	Horizontal Directional Drill	XXX	XXX	XXXX	XXX

Determined in accordance with EN 16228-3:2014+A1:2021.
Conformity Assessment: Annex V

Data for Regulation (EU) No 2024/573 on Fluorinated Greenhouse Gases (if equipped with cab)

Model	HFC	kg	GWP	CO_2 Equivalent (metric tonnes)
XXXXX	134A	XXXX	1430	XXXX

The Technical Construction File is maintained at the manufacturer's location. The Authorized representative designated below is authorized to make the technical file available to the competent authorities of the Member States in response to a duly reasoned request.

This declaration has been issued under the sole responsibility of the manufacturer.
The object of the declaration is in conformity with relevant Union harmonization legislation.

Certified:

Authorized Representative:

Marcel Dutrieux
Manager European Product Integrity
Toro Europe NV
Nijverheidsstraat 5
2260 Oevel
Belgium

Engineering Director
1959 West Fir Avenue
Perry, OK 73077, USA

Date _____

UK Declaration of Conformity

The Charles Machine Works Inc., PO Box 66, 1959 West Fir Avenue, Perry, Oklahoma, USA, declares that the following unit(s):

Model	Serial Number	Description
XXXXX	XXXXXXXXXXXXXXXX	Horizontal Directional Drill

Conform(s) to the following UK national laws:

S.I. 2001 No.1701 (Noise), S.I. 2008 No.1597 (Machinery Safety), and S.I. 2016 No.1091 (EMC).

Each model listed has been evaluated with the following standards and/or other normative documents:

EN 16228-1:2014
EN 16228-3:2014
EN ISO 13766-1:2018

Data for Noise Regulation (S.I. 2001 No. 1701)

Model	Classification	Measured Sound Power (dBA)	Guaranteed Sound Power (dBA)	Engine Speed (rpm)	Engine Power (kW)
XXXXX	Horizontal Directional Drill	XXX	XXX	XXXX	XXX

Determined in accordance with EN 16228-3:2014+A1:2021.
Conformity Assessment: Schedule 8

Data for S.I. 2019 No. 583 (Fluorinated Greenhouse Gases) (if equipped with cab):

Model	HFC	kg	GWP	CO_2 Equivalent (metric tonnes)
XXXXX	134A	XXXX	1430	XXXX

The Technical Construction File is maintained at the manufacturer's location. The Authorized representative designated below is authorized to make the technical file available to the competent authorities of the Member States in response to a duly reasoned request.

This declaration has been issued under the sole responsibility of the manufacturer.
The object of the declaration is in conformity with relevant UK legislation.

Certified:

Authorized Representative:

Marcel Dutrieux
Manager European Product Integrity
Toro U.K. Limited
Spellbrook Lane West
Bishop's Stortford
CM23 4BU
United Kingdom

Engineering Director
1959 West Fir Avenue
Perry, OK 73077, USA

Date _____

Support

Registration

If your equipment was purchased through a Ditch Witch dealer, it is already registered. If you purchased from any other source, please email productsupportwarrantyadmin@ditchwitch.com or fill out the registration card located in the back of the parts manual. Registration enables you to receive updates on this equipment as well as information on new products of interest.

Procedure

Notify your dealer immediately of any malfunction or failure of Ditch Witch equipment.

Always give model, serial number, and approximate date of your equipment purchase. This information should be recorded and placed on file by the owner at the time of purchase.

Return damaged parts to dealer for inspection and warranty consideration if in warranty time frame.

Order genuine Ditch Witch replacement or repair parts from your authorized Ditch Witch dealer. Use of another manufacturer's parts may void warranty consideration.

Resources

Publications

Contact your Ditch Witch dealer for publications and videos covering safety, operation, maintenance, and repair of your equipment.

Ditch Witch Training

For information about on-site individualized training, contact your Ditch Witch dealer.

Warranty

Ditch Witch Equipment and Replacement Parts
Limited Warranty Policy

Subject to the limitation and exclusions herein, free replacement parts will be provided at any authorized Ditch Witch dealership for any Ditch Witch equipment or parts manufactured by the Ditch Witch factory that fail due to a defect in material or workmanship within one (1) year of first commercial use. Free labor will be provided at any authorized Ditch Witch dealership for installation of parts under this warranty during the first year following "initial commercial" use of the serial-numbered Ditch Witch equipment on which it is installed. The customer is responsible for transporting their equipment to an authorized Ditch Witch dealership for all warranty work.

Exclusions from Product Warranty

- All incidental or consequential damages.
- All defects, damages, or injuries caused by misuse (including, but not limited to, rollover), abuse, improper installation, alteration, neglect, or uses other than those for which products were intended.
- All defects, damages, or injuries caused by improper training, operation, or servicing of products in a manner inconsistent with manufacturer's recommendations.
- All engines and engine accessories (these are covered by original manufacturer's warranty).
- Tires, belts, and other parts which may be subject to another manufacturer's warranty (such warranty will be available to purchaser).
- ALL IMPLIED WARRANTIES NOT EXPRESSLY STATED HEREIN, INCLUDING ANY WARRANTY OF FITNESS FOR A PARTICULAR PURPOSE AND MERCHANTABILITY.

IF THE PRODUCTS ARE PURCHASED FOR COMMERCIAL PURPOSES, AS DEFINED BY THE UNIFORM COMMERCIAL CODE, THEN THERE ARE NO WARRANTIES WHICH EXTEND BEYOND THE FACE HEREOF AND THERE ARE NO IMPLIED WARRANTIES OF ANY KIND WHICH EXTEND TO A COMMERCIAL BUYER. ALL OTHER PROVISIONS OF THIS LIMITED WARRANTY APPLY INCLUDING THE DUTIES IMPOSED.

Ditch Witch products have been tested to deliver acceptable performance in most conditions. This does not imply they will deliver acceptable performance in all conditions. Therefore, to assure suitability, products should be operated under anticipated working conditions prior to purchase.

Defects will be determined by an inspection within thirty (30) days of the date of failure of the product or part by Ditch Witch Product Support (DWPS) or its authorized dealer. DWPS will provide the location of its inspection facilities or its nearest authorized dealer upon inquiry. DWPS reserves the right to supply remanufactured replacements parts under this warranty as it deems appropriate.

Extended warranties are available upon request from your local Ditch Witch dealer or the Ditch Witch factory.

Some states do not allow exclusion or limitation of incidental or consequential damages, so above limitation of exclusion may not apply. Further, some states do not allow exclusion of or limitation of how long an implied warranty lasts, so the above limitation may not apply. This limited warranty gives product owner specific legal rights and the product owner may also have other rights which vary from state to state.

For information regarding this limited warranty, contact the DWPS department, P.O. Box 66, Perry, OK 73077-0066, or contact your local dealer.

First version: 1/91; Latest version: 7/19

Emissions Warranty Statement

Federal Emissions Control Warranty Statement (U.S. only)
Your Warranty Rights and Obligations

Introduction

Emissions related parts and components of the engine are covered by the Emissions Warranty. Non-emissions related parts and components of the engine are covered by the terms and conditions of the equipment warranty. New equipment that use compression ignition engines must be designed, built, and equipped to meet stringent anti-smog standards. The Charles Machine Works, Inc. must warrant the emissions control system on your equipment for the period listed below provided there has been no abuse, neglect, or improper maintenance of your equipment leading to the failure of the emissions control system.

Your emissions control system may include parts such as: aftertreatment equipment, aftertreatment equipment mounting, DEF lines, DEF tanks, DEF pump, air induction system and other associated emission-related components.

Manufacturer's Warranty Coverage

This emissions control system is warranted for a number of years depending on the power class and speed rating, see table below. If any emission-related part on your equipment is defective, the part will be repaired or replaced by The Charles Machine Works, Inc.

Owner's Warranty Responsibilities

As the equipment owner, you are responsible for performance of the required maintenance listed in your operator's manual. The Charles Machine Works, Inc. recommends that you retain all receipts covering maintenance on your equipment, but The Charles Machine Works, Inc. cannot deny warranty solely for the lack of receipts.

As the equipment owner, you should be aware that The Charles Machine Works, Inc. may deny you warranty coverage if your equipment or a part has failed due to abuse, neglect, improper maintenance, or unapproved modifications.

You are responsible for presenting your equipment to a Ditch Witch® service center as soon as the problem exists. The warranty repairs should be completed in a reasonable amount of time, not to exceed 30 days. If you have a question regarding your warranty coverage, you should contact your local Ditch Witch Dealer or The Charles Machine Works, Inc. at 1-800-433-6652.

General Emissions Warranty Coverage

The Charles Machine Works, Inc. warrants to the ultimate purchaser and each subsequent purchaser that the equipment is:

- Designed, built, and certified to conform with all applicable emissions regulations, and
- Identical in all material respects to the parts as described in the application for certification, and
- Free from defects in materials and workmanship that could cause the failure of a warranted part.

The warranty period begins on the date the equipment is delivered to an ultimate purchaser. The warranted period is a number of years depending on power and speed rating.

If engine is certified as	And its maximum power is	And its rated speed is	Then it's warranty period is
Variable speed or constant speed	kW < 19 hp < 25	Any speed	1500 hours or two years, whichever comes first
Constant speed	19 ≤ kW < 37 25 ≤ hp < 49	3000 rpm or higher	1500 hours or two years, whichever comes first
Constant speed	19 ≤ kW < 37 25 ≤ hp < 49	Less than 3000 rpm	3000 hours or five years, whichever comes first
Variable speed	19 ≤ kW < 37 25 ≤ hp < 499	Any speed	3000 hours or five years, whichever comes first
Variable speed or constant speed	kW ≥ 37 hp ≥ 49	Any speed	3000 hours or five years, whichever comes first

Subject to certain conditions and exclusions as stated below, the warranty on emission-related parts is as follows:

1. Any warranted part that is not scheduled for replacement as required maintenance in the written instructions supplied, is warranted for the warranty period stated above. If the part fails during the period of warranty coverage, the part will be repaired or replaced by The Charles Machine Works, Inc. Any such part repaired or replaced under warranty will be warranted for the remainder of the warranty period.
2. Any warranted part that is scheduled only for regular inspection in the written instructions supplied is warranted for the warranty period stated above. Any such part repaired or replaced under the warranty will not reduce the period of warranty coverage and will be warranted for the remainder of the warranty period.
3. Any warranted part that is scheduled for replacement as required maintenance in the written instructions supplied is warranted for the period of time prior to the first scheduled replacement date for that part. If the part fails before the first scheduled replacement, the part must be repaired or replaced by The Charles Machine Works, Inc. Any such part repaired or replaced under warranty will be warranted for the remainder of the period up to the first scheduled replacement point for the part.
4. Repair or replacement of any warranted part under the warranty provisions herein must be performed at an Authorized Service Dealer at no charge to the owner.
5. Warranty services or repairs will be provided at all Service Dealers authorized to service the subject equipment.
6. The equipment owner will not be charged for diagnostic labor that is directly associated with diagnosis of a defective, emission-related warranted part, provided that such diagnostic work is performed by an Authorized Service Dealer.
7. The Charles Machine Works, Inc. is liable for damages to other engine or equipment components proximately caused by a failure under warranty of any warranted part.
8. Throughout the emissions control system's warranty period stated above, The Charles Machine Works, Inc. will maintain a supply of warranted parts sufficient to meet the expected demand for such parts.
9. Manufacturer approved replacement parts may be used in the performance of any warranty maintenance or repairs and must be provided without charge to the owner. Such use will not reduce the warranty obligations of The Charles Machine Works, Inc.
10. Add-on or modified parts that are not approved by The Charles Machine Works, Inc. may not be used. The use of a non-approved, add-on, or modified part by the purchaser will be grounds for disallowing a warranty claim. The Charles Machine Works, Inc. will not be liable to warrant failures of warranted parts caused by the use of non-approved, add-on, or modified parts.

Warranted Parts

The repair or replacement of any warranted part otherwise eligible for warranty coverage may be excluded from such coverage if The Charles Machine Works, Inc. demonstrates that the equipment has been abused, neglected, or improperly maintained, and that such abuse, neglect, or improper maintenance was the direct cause of the need for repair or replacement of the part. That notwithstanding, any adjustment of a component that has a factory installed, and properly operating, adjust limiting device is still eligible for warranty coverage. The following emissions warranty parts are covered.

Air Handling System and Associated Plumbing

- Ambient air temperature sensor
- Charge air cooler
- Charge air cooler plumbing
- Air filter housing and associated plumbing

Engine Electronic Components

- Wire harness circuits connected at both ends to emissions warrantable components

Exhaust System

- Exhaust gas piping from turbocharger out to the last aftertreatment device

Exhaust Aftertreatment

- All exhaust aftertreatment devices and components attached
- Exhaust aftertreatment mounting
- DEF tank and lines
- DEF tank heater
- DEF tank electronics
- DEF tank heater coolant control valve
- DEF pump

Engine Cooling System

- Coolant level sensor