FM25/FM25X

Kubota® D1105

Operator's Manual



CE UK CA

CMW®

Issue 4.0
Original Instruction

053-1187

Overview

Chapter Contents

Serial Number Location 2

Intended Use 2

Equipment Modification 3

Machine Components 3

Operator Orientation 4

About This Manual 4

- Bulleted Lists 4
- Numbered Lists 4

California Proposition 65

⚠WARNING The engine exhaust from this product contains chemicals known to the State of California to cause cancer, birth defects, and other reproductive harm. www.P65warnings.ca.gov.

Serial Number Location

Record serial number and date of purchase in spaces provided. Serial number is located as shown.

Item	
Date of manufacture	
Date of purchase	
Machine serial number	

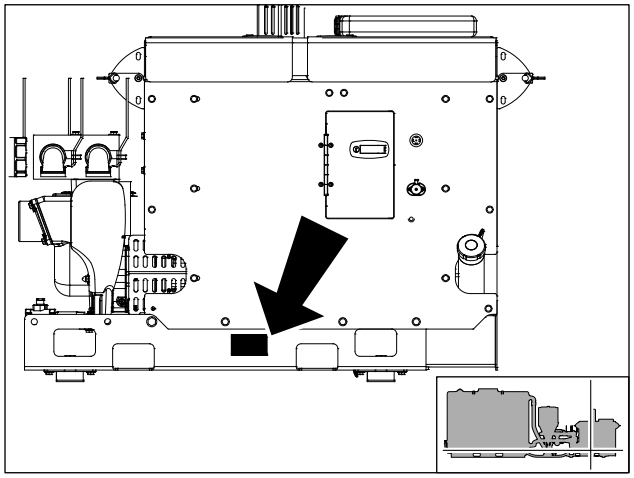
j24om001h.jpg

Intended Use

The FM25/FM25X is a platform-mounted venturi machine capable of mixing and transferring fluid under pressure to the drilling unit. It can be equipped with 300-gal (1136-L) or 400-gal (1514-L) tank.

This machine is intended for operation only according to the instructions in this manual. Operate machine in ambient temperatures from 10° to 115°F (-12° to 46°C) for electric start machines and 20° to 115°F (-7° to 46°C) for rope start machines. Contact your Ditch Witch® dealer for provisions required for operating in extreme temperatures. Use in any other way is considered contrary to the intended use.

This machine should be operated, serviced, and repaired only by professionals familiar with its particular characteristics and acquainted with the relevant safety procedures.

Equipment Modification

This equipment was designed and built in accordance with applicable standards and regulations. Modification of equipment could mean that it will no longer meet regulations and may not function properly or in accordance with the operating instructions. Modification of equipment should only be made by competent personnel possessing knowledge of applicable standards, regulations, equipment design functionality/requirements and any required specialized training.

Machine Components

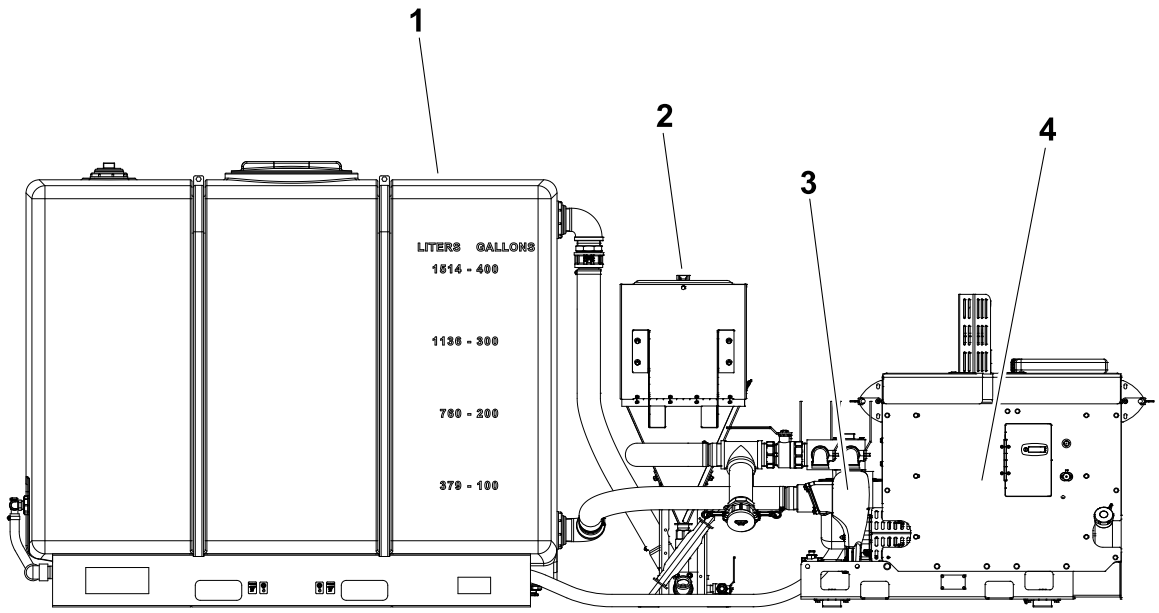

j24om002h.eps

1. Tank
2. Hopper
3. Pumps
4. Engine

Operator Orientation

IMPORTANT: Top view of machine is shown.

1. Front
2. Right side
3. Rear
4. Left side

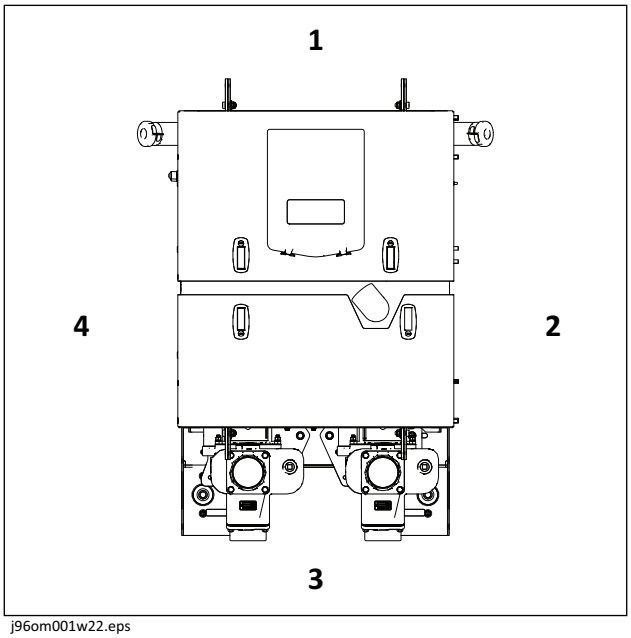

j96om001w22.eps

About This Manual

This manual contains information for the proper use of this machine. Cross references such as "See page 50" will direct you to detailed procedures.

Bulleted Lists

Bulleted lists provide helpful or important information or contain procedures that do not have to be performed in a specific order.

Numbered Lists

Numbered lists contain illustration callouts or list steps that must be performed in order.

Foreword

This manual is an important part of your equipment. It provides safety information and operation instructions to help maintain your Ditch Witch® equipment.

Read this manual before using your equipment. Keep it with the equipment at all times for future reference. If you sell your equipment, be sure to give this manual to the new owner.

If you need a replacement copy, contact your Ditch Witch dealer. If you need assistance in locating a dealer, visit our website at www.ditchwitch.com or write to the following address:

The Charles Machine Works, Inc.
ATTN: Marketing Department
PO Box 66
Perry, OK 73077-0066
USA

The descriptions and specifications in this manual are subject to change without notice. The Charles Machine Works, Inc. reserves the right to improve equipment. Some product improvements may have taken place after this manual was published. For the latest information on Ditch Witch equipment, see your Ditch Witch dealer.

Thank you for buying and using Ditch Witch equipment.

FM25/FM25X
Operator's Manual

Kubota D1105

Issue number 4.0/OM-9/25
Part number 053-1187

Copyright 2007, 2017, 2023, 2025
by The Charles Machine Works, Inc.

 and Ditch Witch are registered trademarks of The Charles Machine Works, Inc.

This product and its use may be covered by one or more patents at http://patents.charlesmachine.works.

Contents

Overview 1

machine serial number, information about the type of work this machine is designed to perform, basic machine components, and how to use this manual

Foreword 5

part number, revision level, and publication date of this manual, and factory contact information

Safety 7

machine safety alerts and emergency procedures

Prepare 19

procedures for preparing jobsite, preparing operator, and preparing equipment

Controls 25

machine controls, gauges, and indicators and how to use them

Transport 13

procedures for lifting, hauling, and towing

Mix Fluid 37

procedures for mixing and transferring drilling fluid

Drilling Fluid Concepts 43

procedures for selecting fluid additives, determining fluid requirements, and measuring viscosity

Complete the Job 47

procedures for restoring the jobsite and rinsing and storing equipment

Maintenance 45

service intervals and instructions for this machine including lubrication, replacement of wear items, and basic maintenance

Specifications 17

machine specifications including weights, measurements, power ratings, and fluid capacities

Support 25

the warranty policy for this machine and procedures for obtaining warranty consideration and training

Safety

Chapter Contents



For additional precautions, see "Prepare" chapter.

Safety Alert Classification 8

Guidelines 9

Emergency Procedures 10

- Electric Strike Description 10
- If an Electric Line is Damaged 11
- If a Gas Line is Damaged 11
- If a Fiber Optic Cable is Damaged 12
- If Machine Catches on Fire 12

Machine Safety Alerts 19

Safety Alert Classifications

These classifications and the icons defined on the following pages work together to alert you to situations which could be harmful to you, jobsite bystanders or your equipment. When you see these words and icons in the book or on the machine, carefully read and follow all instructions. YOUR SAFETY IS AT STAKE.

Watch for the three safety alert levels: **DANGER**, **WARNING** and **CAUTION**. Learn what each level means.

⚠ DANGER indicates a hazardous situation that, if not avoided, will result in death or serious injury. This signal word is to be limited to the most extreme situations.

⚠ WARNING indicates a hazardous situation that, if not avoided, could result in death or serious injury.

⚠ CAUTION indicates a hazardous situation that, if not avoided, could result in minor or moderate injury.

Watch for two other words: ***NOTICE*** and **IMPORTANT**.

NOTICE indicates information considered important, but not hazard-related (e.g., messages relating to property damage).

IMPORTANT can help you do a better job or make your job easier in some way.

Guidelines



WARNING Misuse of machine can cause death or serious injury. Read and understand operator's manual and all other safety instructions before use. Know how to use all controls.

Follow these guidelines before operating any jobsite equipment:

- Complete proper training.
- Read and understand operator's manual before using equipment.
- Wear personal protective equipment including long pants, hard hat, eye protection, hearing protection, and protective footwear.
- Do not wear jewelry or loose clothing.
- Mark proposed path with white paint and have underground utilities located before working. In the US or Canada, call 811 (US) or 888-258-0808 (US and Canada). Also contact any local utilities that do not participate in the One-Call service. In countries that do not have a One-Call service, contact all local utility companies to have underground utilities located.
- Classify jobsite based on its hazards and use correct tools and machinery, safety equipment, and work methods for jobsite.
- Mark jobsite clearly and keep spectators away.
- Review jobsite hazards, safety and emergency procedures, and individual responsibilities with all personnel before work begins. Safety videos are available from your Ditch Witch dealer or at www.ditchwitch.com/safety. Safety Data Sheets (SDS) are available at www.ditchwitch.com/support.
- Ensure jobsite is adequately lit. Arrange for secondary light sources as needed.
- Complete the equipment checklist located at www.ditchwitch.com/safety.
- Fully inspect equipment before operating. Repair or replace any worn or damaged parts. Replace missing or damaged safety shields and safety alert signs. Contact your Ditch Witch dealer for assistance.
- Follow instructions on all safety alert signs on machine.
- Keep access steps and platforms clean and free of obstacles and debris.
- Use equipment carefully per the instructions in this manual. Stop operation and investigate anything that does not look or feel right.
- Do not operate machine where flammable gas may be present.
- Only operate equipment in well ventilated areas.
- Always tie down equipment and properly stow accessories, even if traveling short distances.
- Contact your Ditch Witch dealer if you have any questions about operation, maintenance, or equipment use.

Emergency Procedures

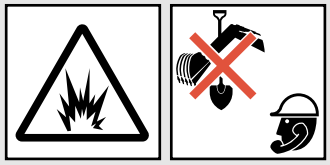

WARNING Underground utilities. Contact can cause death or serious injury. Locate and verify underground utilities before digging or drilling.

Before operating any equipment, review emergency procedures and check that all safety precautions have been taken.

EMERGENCY SHUTDOWN: Shut off machine or press remote engine stop button or emergency stop button (if equipped).

Electric Strike Description

When working near electric cables, remember the following:

- Electricity follows all paths to ground, not just path of least resistance.
- Pipes, hoses, and cables will conduct electricity back to all equipment.
- Low voltage current can injure or kill. Many work-related electrocutions result from contact with less than 440 volts.

Most electric strikes are not noticeable, but indications of a strike include:

- power outage
- smoke
- explosion
- popping noises
- arcing electricity

If any of these occur, assume an electric strike has occurred.

If an Electric Line is Damaged

If you suspect an electric line has been damaged, DO NOT MOVE. Take the following actions. The order and degree of action will depend on the situation.

- If you are **on equipment connected to the horizontal directional drill,** REMAIN ON MACHINE.
- If you are **off connected equipment,** DO NOT TOUCH ANY EQUIPMENT connected to machine.
    - If you must leave the area, take small steps with feet close together to reduce the hazard of being shocked from one foot to the other.
    - If you leave, do not return to area or allow anyone into area until given permission by electric company.
- Warn people nearby that an electric strike has occurred. Instruct them to leave the area.
- Have someone contact electric company to shut off power.
- Do not resume drilling or allow anyone into area until given permission by utility company.
- Do not resume drilling or allow anyone into area until given permission by electric company.

If a Gas Line is Damaged

If you suspect a gas line has been damaged, take the following actions. The order and degree of action will depend on the situation.

- Immediately shut off engine(s), if this can be done safely and quickly.
- Remove any ignition source(s), if this can be done safely and quickly.
- Warn others that a gas line has been cut and that they should leave the area.
- After warning others to leave the area, leave jobsite as quickly as possible.
- Immediately call your local emergency phone number and utility company.
- If jobsite is along street, stop traffic from driving near jobsite.
- Do not return to jobsite until given permission by emergency personnel and utility company.

If a Fiber Optic Cable is Damaged

Do not look into cut ends of fiber optic or unidentified cable. Vision damage can occur. Contact utility company.

If Machine Catches on Fire

Perform emergency shutdown procedure and then take the following actions. The order and degree of action will depend on the situation.

- Immediately move battery disconnect switch (if equipped and accessible) to disconnect position.
- If fire is small and fire extinguisher is available, attempt to extinguish fire.
- If fire cannot be extinguished, leave area as quickly as possible and contact emergency personnel.

Machine Safety Alerts

Mixing Unit

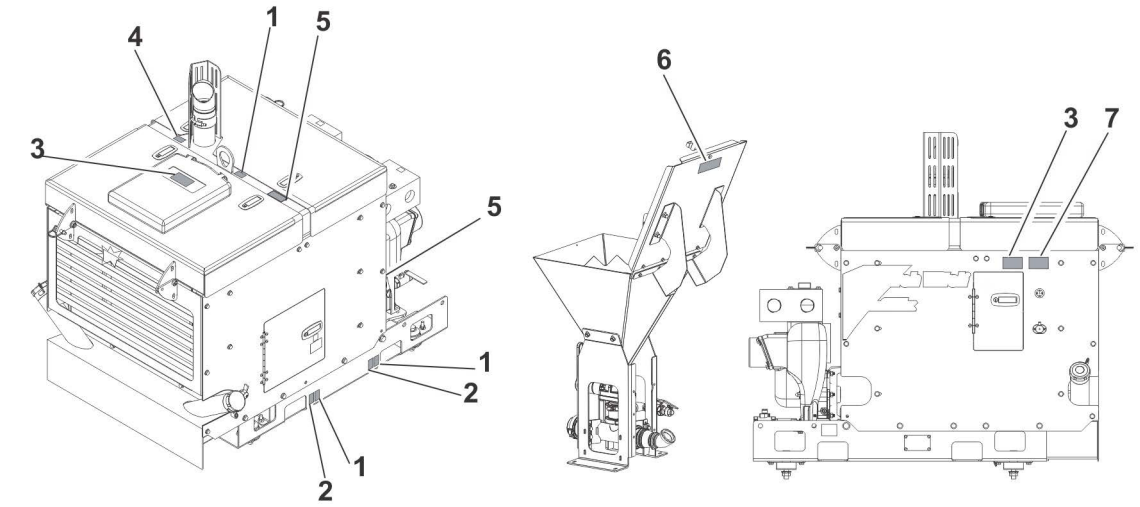

Decal_FM25X

1		Lift point. See Transport chapter for more information.
2		Tiedown location. See Transport chapter for more information.
3	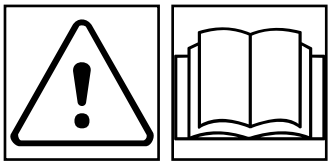	**⚠ WARNING** Misuse of machine can cause death or serious injury. Read and understand operator's manual and all other safety instructions before use. Know how to use all controls.
4		**⚠ CAUTION** Hot parts. Contact can cause burns. Do not touch until cool. Wear gloves.

5	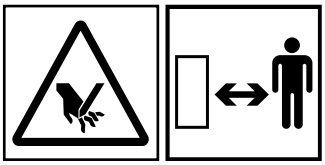	**⚠ WARNING** Moving parts. Contact can cause serious injury. Stay away.
6	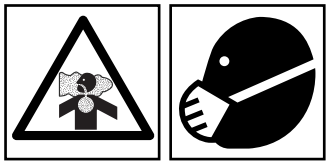	**⚠ WARNING** Silica dust. Exposure can cause lung disease. Use breathing protection.
7	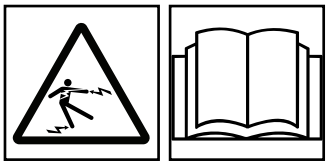	**⚠ DANGER** Connected electrified equipment. Contact will cause death or serious injury. Read and understand operator's manual. Know emergency procedures.

Tank

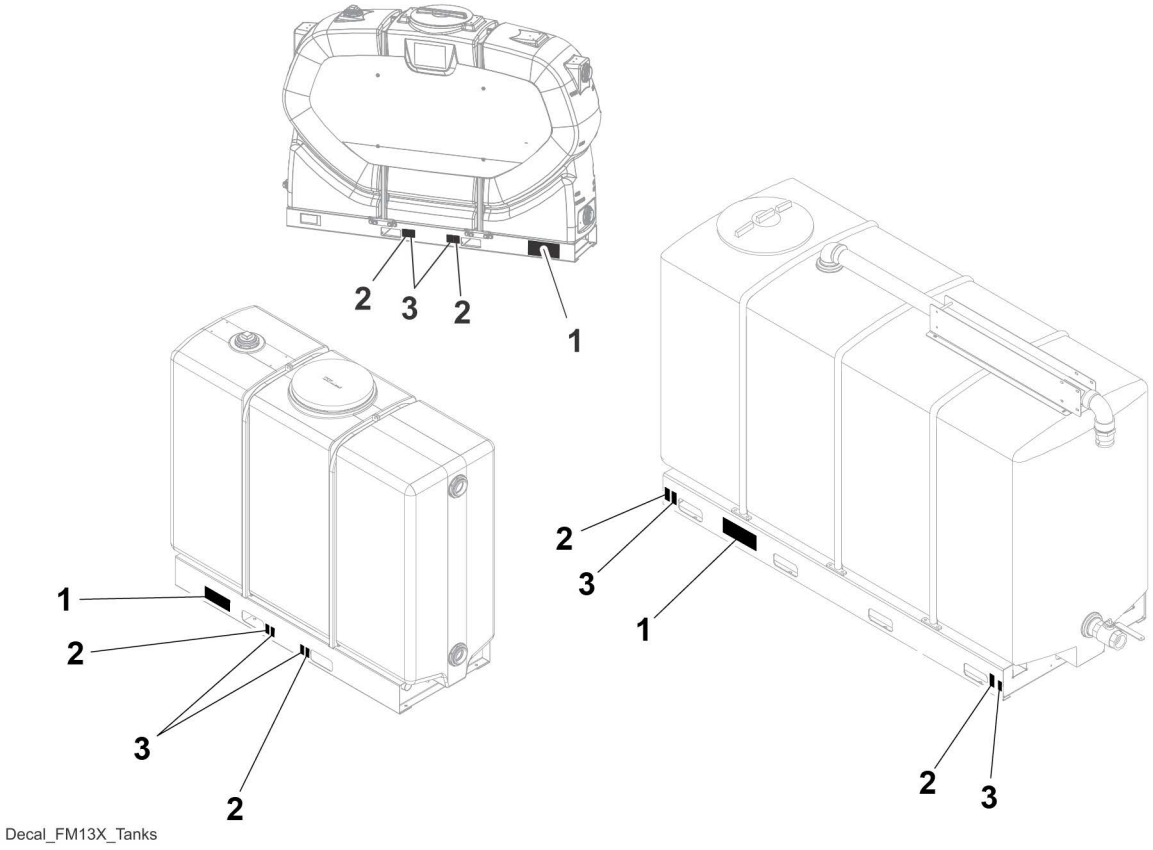

1	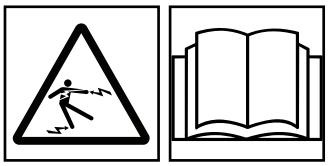	**DANGER** Connected electrified equipment. Contact will cause death or serious injury. Read and understand operator's manual. Know emergency procedures.
2	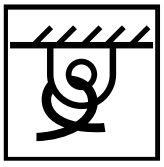	Tiedown location. See Transport chapter for more information.
3	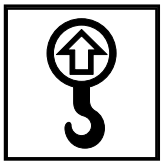	Lift point. See Transport chapter for more information.

Prepare

Chapter Contents



For additional precautions, see "Safety" chapter.

Prepare Jobsite 20

- Review Job Plan 20
- Select Machine Location 20
- Identify Hazards 21
- Arrange for Traffic Control 21

Prepare Operator 22

Prepare Equipment 23

- Check Supplies 23
- Check Equipment 23
- Assemble Accessories 24
- Set Up at Jobsite 24

Prepare Jobsite



WARNING Underground utilities. Contact can cause death or serious injury. Locate and verify underground utilities before digging or drilling.

To help avoid injury:

- Expose lines by careful hand digging or soft excavation before operating equipment. Use appropriate equipment and procedures for exposing utility lines.
- Follow local regulations for digging near utilities.

A successful job begins before working. The first step in planning is reviewing information already available about the job and jobsite.

Review Job Plan

Review blueprints or other plans. Check for information about existing or planned structures, elevations, or proposed work that may be taking place at the same time.

Select Machine Location

Consider the following when selecting a location:

Slope

Equipment should be parked on a level site. Consider how slope will affect setup and operation. Assess the risks on each slope to determine if factors affecting risks create an unsafe condition for working.

Space/Proximity

Ensure location allows enough space for working. Verify hoses can reach other jobsite machines.

Comfort

Consider shade, wind, fumes, and other site features.

Identify Hazards

Inspect jobsite before transporting equipment. Check for the following:

- overall grade or slope
- changes in elevation such as hills or open trenches
- obstacles such as buildings, railroad crossings, or streams
- signs of utilities
  - "buried utility" notices
  - gas or water meters
  - drop boxes
  - manhole covers
  - utility facilities without overhead lines
  - junction boxes
  - light poles
  - sunken ground
- traffic
- access
- water supply

Arrange for Traffic Control

Vehicle and pedestrian traffic must be a safe distance from equipment. Evaluate jobsite and allow an appropriate buffer zone around equipment. If working near a road or other traffic area, contact local authorities about safety procedures and regulations.

Prepare Operator



WARNING Jobsite hazards. Exposure can cause death or serious injury. Use correct equipment and work methods. Use and maintain appropriate safety equipment.

To help avoid injury:

- Wear personal protective equipment including hard hat, safety eye wear, foot protection, hearing protection, and gloves (except when near rotating equipment).
- Remove jewelry.
- Wear close-fitting, high visibility clothing.
- Have other personal protective equipment, such as insulated boots and gloves, breathing protection, and face shield, etc. available for use depending on jobsite hazards or requirements.

Follow these guidelines before operating any jobsite equipment:

- Complete proper training and read operator's manual before using equipment.
- Plan for emergency services. Have the telephone numbers for local emergency and medical facilities on hand. Check that you will have access to a telephone.
- Review jobsite hazards, safety and emergency procedures, and individual responsibilities with all personnel before work begins. Safety videos are available from your Ditch Witch® dealer or at www.ditchwitch.com/safe. Safety Data Sheets (SDS) are available at www.ditchwitch.com/support.
- Use equipment carefully. Stop operation and investigate anything that does not look or feel right.

Any time jobsite is classified as electric, operator must wear boots and gloves meeting the following standards:

- Boots must have high tops and meet the electric hazard protection requirements of ASTM F2413 or ASTM F1117 when tested at 18,000 volts. Tuck legs of pants completely inside boots.
- Gloves must have 17,000 AC maximum use voltage, according to ASTM specification D120.
- If working around higher voltage, use gloves and boots with appropriately higher ratings.

Prepare Equipment

Check Supplies

- fuel
- keys
- marking flags or paint
- notepad and pencil
- spare fuses
- lubricants

Check Equipment

Fluid Levels

- fuel
- engine oil

Condition and Function

- all controls

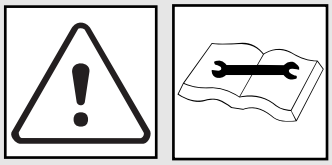

⚠WARNING Improper control function. Use can cause death or serious injury. If control does not work as described in instructions, stop machine and have it serviced.

- battery
- hoses and valves
- pumps and motors
- tires or tracks
- signs, guards, and shields
- couplers and fittings
- water tank(s)

Assemble Accessories

If required, mount fire extinguisher near the power unit but away from possible points of ignition. The fire extinguisher should always be classified for both oil and electric fires. It should meet legal and regulatory requirements.

Set Up at Jobsite

1. Position machine and connect to drilling machine. See drilling machine operator's manual for more information.

   IMPORTANT: If mounted on a trailer, leave machine hitched to towing vehicle or ensure it is properly stabilized.

2. Block trailer wheels.

Controls

Chapter Contents

Mixing Unit 26

Power Unit 29

Mixing Unit

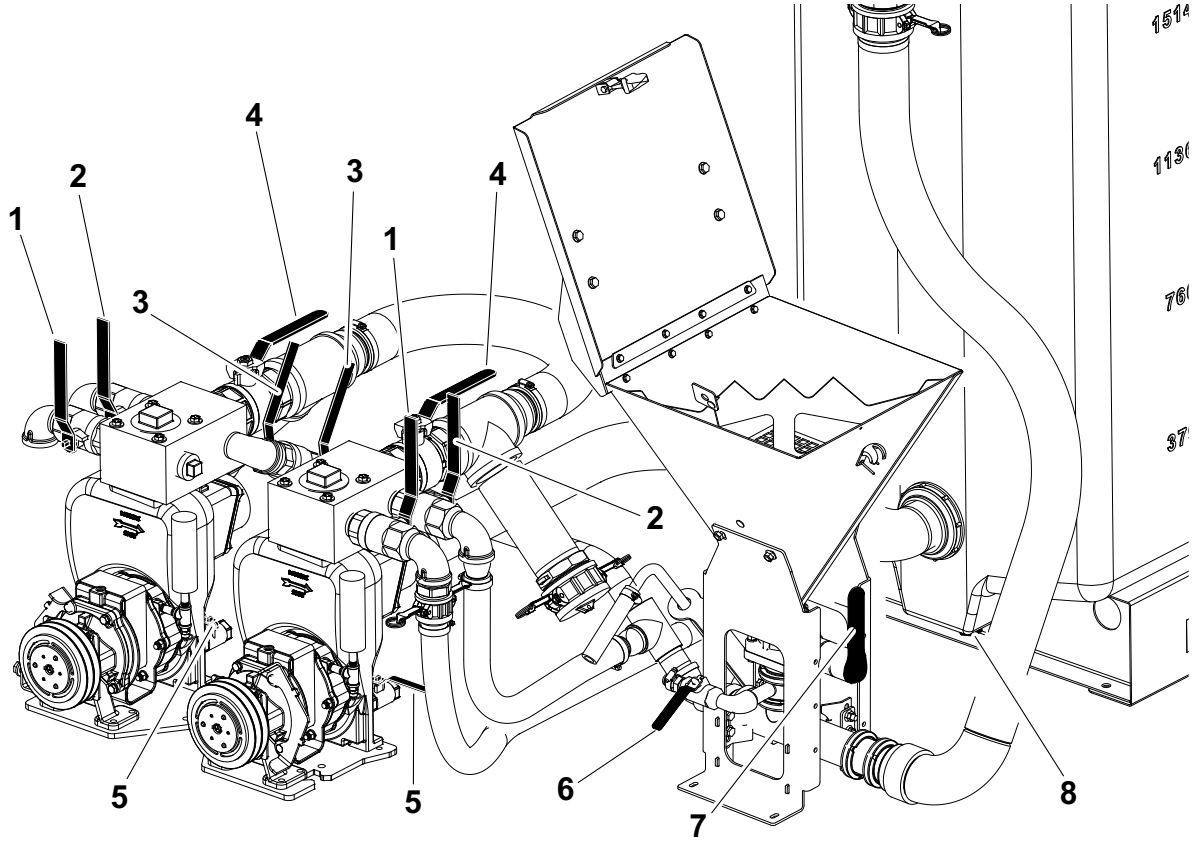

1. Mixing jet valve
2. Circulation valve
3. Transfer valve
4. Discharge valve
5. Pump drain valve
6. Liquid additive pickup valve
7. Hopper valve
8. Drain plug

IMPORTANT: On mechanical valves, handle placement indicates whether valve is opened or closed.

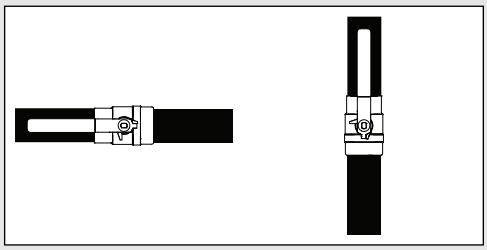
c00ic448w.eps

Open: Move handle in line with hose, as shown.

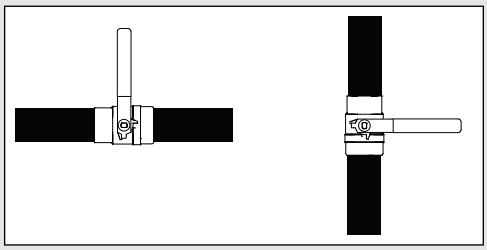
c00ic449w.eps

Close: Move handle perpendicular to hose, as shown.

Item	Description	IMPORTANT
1. Mixing jet valve	To start flow from pump to tank jets, open. To stop flow, close.	
2. Circulation valve	To circulate fluid while mixing, open. To stop circulation, close.	
3. Transfer valve	To allow flow from pump to pump, open. To stop flow, close.	
4. Discharge valve	To start flow from pump to drilling machine, open. To stop flow, close.	
5. Pump drain valve	To drain pump, open. To use, close.	
6. Liquid additive pickup valve	To start flow of liquid additives into mixture, open. To stop flow, close.	Only open when pump is running and mixing venturi valve is open.

Item	Description	IMPORTANT
7. Hopper valve	To start flow from hopper to mixing venturi, open. To stop, close.	• Open valve only when pouring additives into hopper for mixing. Close valve when finished. • Only open valve when pump is running and mixing venturi valve is open.
8. Drain plug	To drain fluid from tank, remove plug. Replace plug before filling tank.	

Power Unit

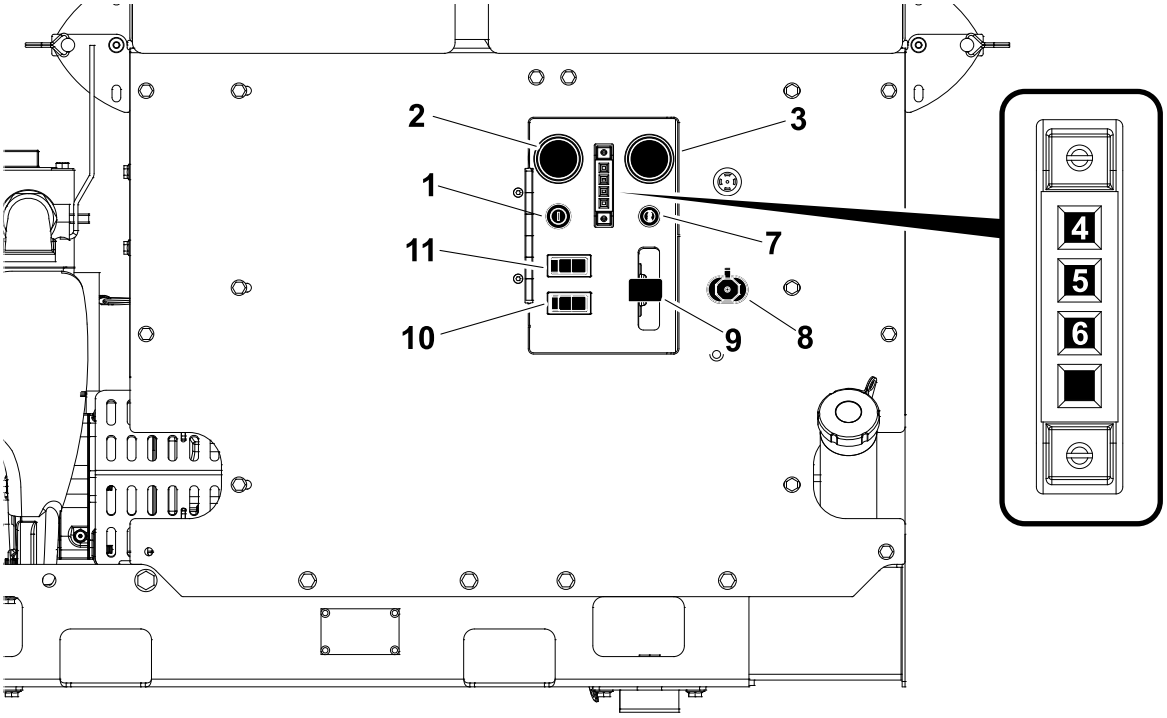

j24om003h.eps

1. Ignition switch
2. Fuel gauge
3. Hourmeter
4. Engine oil pressure indicator
5. Coolant temperature indicator
6. Glow plug wait indicator
7. Glow plug button
8. Auxiliary outlet
9. Throttle
10. Pump 2 control
11. Pump 1 control

Item	Description	IMPORTANT
1. Ignition switch 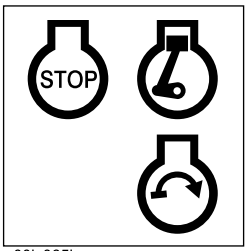 c00ic065h.eps	To start engine, insert key and turn right.	

Item	Description	IMPORTANT
2. Fuel gauge 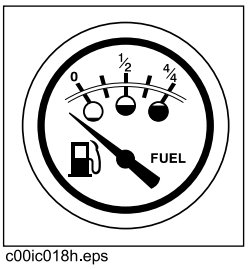 c00ic018h.eps	Displays fuel level in tank.	Use #2 diesel. In temperatures below 40°F (4°C), use #1 diesel fuel.
3. Hourmeter 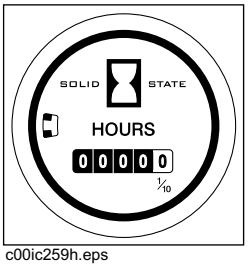 c00ic259h.eps	Displays engine operating time.	Hourmeter runs when ignition switch is on. Use these times to schedule service.
4. Engine oil pressure indicator 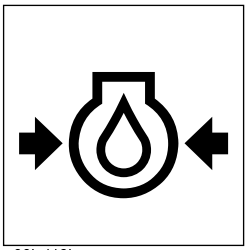 c00ic119h.eps	Indicates engine oil pressure is low. Lights briefly when engine is started.	Engine will stop. 1. Check oil level. 2. Check for leaks before starting engine.
5. Coolant temperature indicator 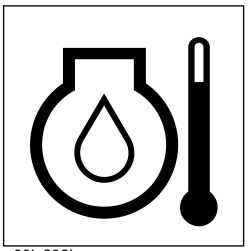 c00ic232h.eps	Lights when engine coolant temperature is over 210°F (100°C).	• Allow engine to cool. • Check coolant level.

Item	Description	IMPORTANT
6. Glow plug wait indicator 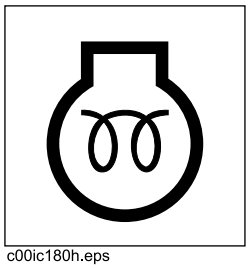 c00ic180h.eps	Lights when intake air preheater is operating.	
7. Glow plug button 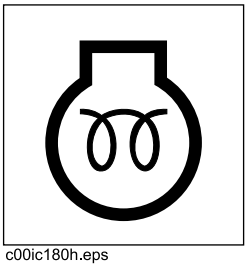 c00ic180h.eps	To activate glow plugs, press.	Wait until glow plug wait indicator goes off before starting engine.
8. Auxiliary outlet 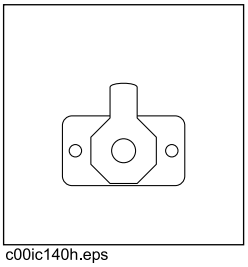 c00ic140h.eps	To operate work lights or other 12V devices, plug into outlet..	Outlet has power only when ignition switch is on.
9. Throttle 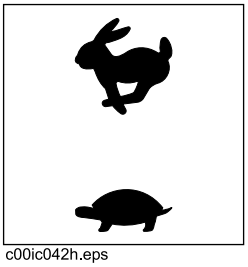 c00ic042h.eps	To increase engine speed, move left. To decrease, move right. To shut off engine, move to stop position.	
10. Pump 2 control 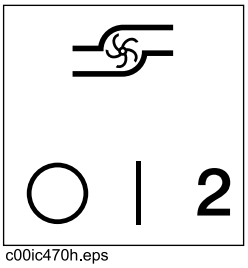 c00ic470h.eps	To turn on pump, press right. To turn off, press left.	

Item	Description	IMPORTANT
11. Pump 1 control 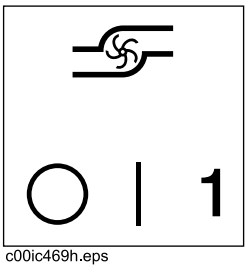 c00ic469h.eps	To turn on pump, press right. To turn off, press left.	

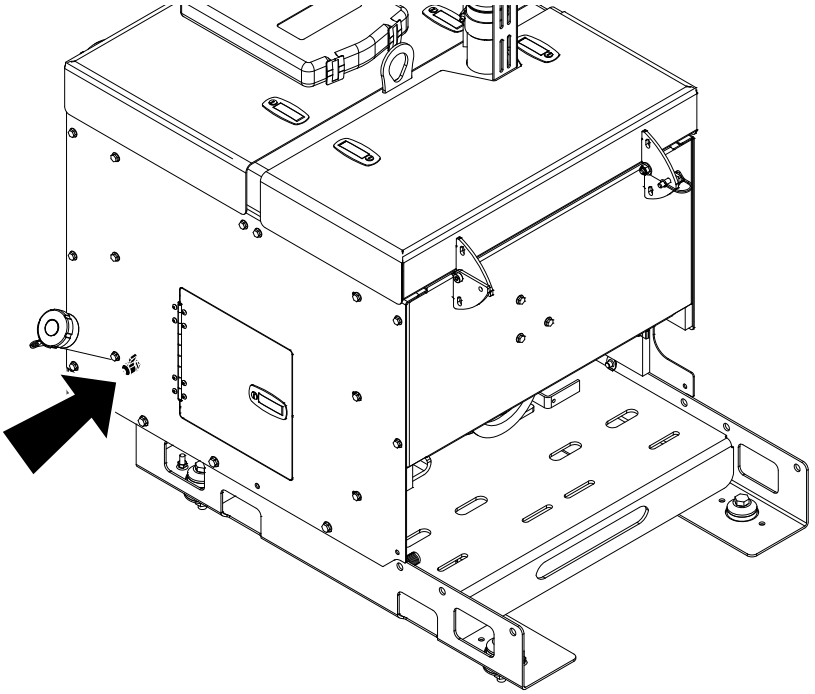

j24om020h.eps

Item	Description	IMPORTANT
1. Battery disconnect switch 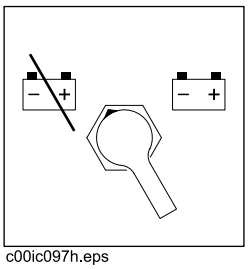 c00ic097h.eps	To connect, turn clockwise. To disconnect, turn counterclockwise.	

Transport

Chapter Contents



For additional precautions, see "Safety" and "Prepare" chapters.

Lift 14

- Points 14
- Procedure 14

Haul 15

Lift

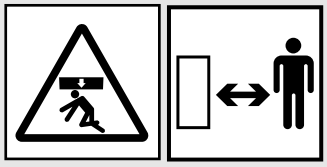

WARNING Lifted load. Crushing weight can cause death or serious injury. Stay away from lifted load and its range of movement.

To help avoid injury: Only lift when tank is empty.

Points

Lifting points are identified by lifting decals. Lifting at other points is unsafe and can damage machinery.

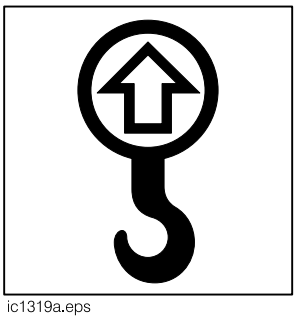

ic1319a.eps

Procedure

Use equipment capable of supporting machine's size and weight. See "Specifications" on page 17 or measure and weigh before lifting.

Tank

Lift mixing tank by attaching lifting devices at lift points as shown.

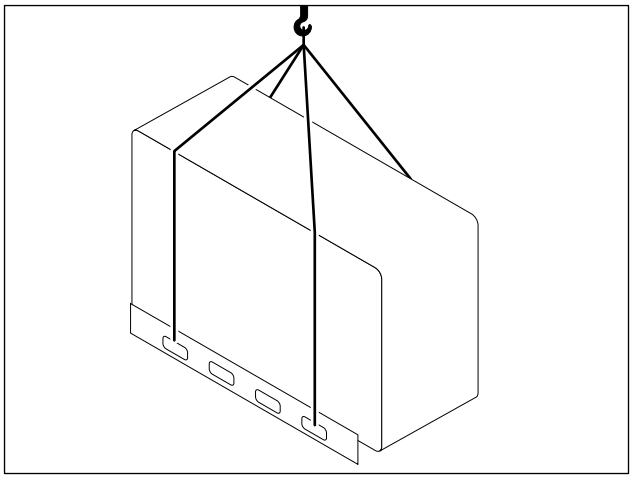

TankLift.eps

Power Unit

Lift power unit by attaching lifting device at lift point.

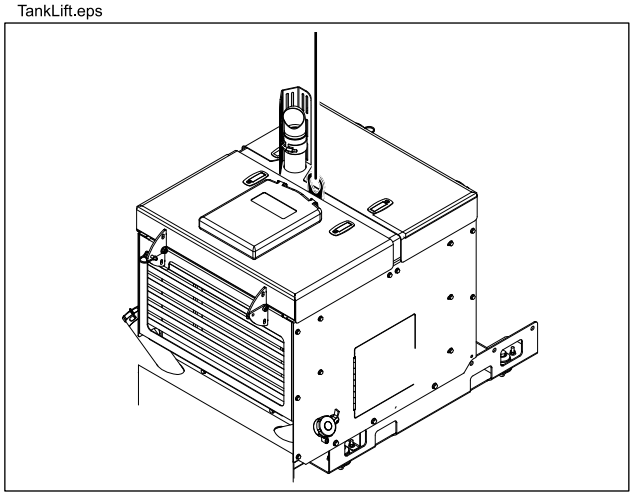

j24om019h.eps

Haul

IMPORTANT: For trailer information, see trailer manufacturer's manual.

If your machine is not mounted to a trailer before delivery, use tie-down points to secure machine during transport.

Mix Fluid

Chapter Contents



For additional precautions, see "Safety" and "Prepare" chapters.

IMPORTANT: For more information on how to operate controls, see "Controls" chapter.

Start 38

Mix Fluid 39

Transfer Fluid 40

Operate in Cold Weather 41

Shut Down 41

Start

EMERGENCY SHUTDOWN: Shut off machine.

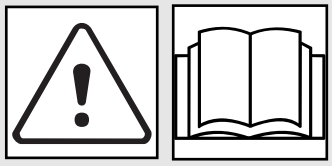

⚠ WARNING Misuse of machine can cause death or serious injury. Read and understand operator's manual and all other safety instructions before use. Know how to use all controls.

To help avoid injury: For starting in extreme temperatures, contact your Ditch Witch® dealer.

NOTICE: If engine turns but does not start within 5 seconds, allow starter to cool. Wait at least one minute and try again.

1. Ensure valve in suction line and at least one valve on pressure side of pump are open.
2. If necessary, close choke valve.
3. Move throttle to half open.
4. Pull rope.
5. Run engine at low throttle under light load for at least three minutes before applying heavier load.
6. Gradually open choke valve after engine warms.

Mix Fluid



⚠ WARNING Chemicals. Improper handling or use can result in illness, injury, or equipment damage. Follow instructions on labels and in Safety Data Sheets (SDS).

1. Check water quality.

   IMPORTANT:

   - Use meter or pH test strips to test pH of water. If pH is below 9.0, add 1lb (454g) soda ash per tank. Test and repeat until pH is between 9 and 10.
   - Use hardness test strips to check water hardness. If hardness exceeds 125ppm, treat with soda ash.

2. Open tank jet valve and mixing venturi valve.
3. Partially open dry chemical hopper valve. Listen for a noticeable "suction" sound.

   IMPORTANT: Add polymers at a very slow rate.

4. For dry chemicals, open sack using bag ripper located inside dry chemical hopper and pour chemicals into hopper.

   IMPORTANT: Metering plate can be seated in bottom of dry chemical hopper to allow dry chemicals to be added at a slower rate.

   - Approximate feed rate with metering plate: 50lb (23kg) per 1.5 minutes.
   - Approximate feed rate without metering plate: 50lb (23kg) per 0.7 minutes.

5. Open dry chemical valve slowly.
6. For liquid polymer and other liquid chemicals, pour needed amount of additive into a suitable container and insert suction wand into container.
7. Open liquid chemical valve slowly.
8. Open fillwell on top of tank and check fluid in tank to ensure that chemicals are mixed correctly.
9. If clumps can be seen in fluid tank, reduce the rate at which materials are added.
10. Check funnel viscosity. See "Funnel Viscosity" on page 42.

Transfer Fluid

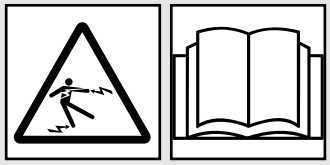

DANGER Buried electrical lines. Contact will cause death or serious injury. Fluid system may become electrified while connected to drilling machine. Read and understand operator's manual. Know emergency procedures.

1. Connect mixing pump hose to drilling machine.

   NOTICE: To prevent damage to drilling fluid pump, ensure y-strainer is used in-line between mixing unit and drilling machine.

2. Open discharge valve of mixing pump.
3. Adjust engine throttle to full to purge all air from line when starting drilling fluid pump on drilling machine.
4. After flow is stable, move throttle to approximately half open to give desired flow rate to drilling machine.

IMPORTANT:

- To reduce agitation in tank when using polymer-based drilling fluids, partially close tank jet valve.
- Overmixing of polymer-based drilling fluids can reduce fluid viscosity.
- Close venturi valve when dry chemical hopper is not in use.

Operate in Cold Weather

For successful operation in cold weather, complete the following:

- Use pump to keep drilling fluid circulating at all times, even during transport to and from jobsite.
- If possible, use all drilling fluid in tank before transporting.

Shut Down

1. Set to low throttle.
2. Shut off machine.

Drilling Fluid Concepts

Chapter Contents



For additional precautions, see "Safety" and "Prepare" chapters.

Recommended Products 44

Mixtures 45

Funnel Viscosity 46

Recommended Products

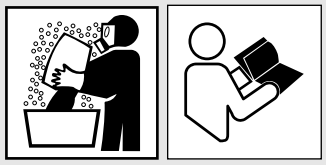

⚠ WARNING Chemicals. Improper handling or use can result in illness, injury, or equipment damage. Follow instructions on labels and in Safety Data Sheets (SDS).

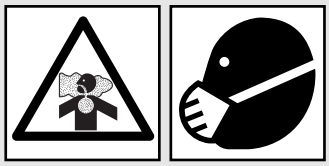

⚠ CAUTION Silica dust. Exposure can cause lung disease. Use breathing protection.

To help avoid injury:

- Use water spray or other means to control dust.
- Follow US Occupational Safety and Health Administration (OSHA) or other applicable regulating guidelines for appropriate breathing protection or dust control methods.

For productive drilling and equipment protection, use these recommended products, available at your Ditch Witch® dealer.

Product	Description
Bentonite	Forms a thin cake on bore walls which lubricates the bore and keeps it open and holds fluid
Premixed bentonite	Contains premixed bentonite, polymer, and soda ash
Polymer	Provides lubrication, increases viscosity in average soils and heavy clay, and reduces swelling that traps pipe in the bore in swelling clay
Wetting agent	Water soluble cleaning solution
Soda ash	Used to adjust pH of water and water hardness

Match drilling fluid to soil type. This chart is meant as a guideline only. Contact your Ditch Witch® dealer or drilling fluid representative for drilling fluid recommendations and soil conditions in your area, or use the Fluid Formulator on www.ditchwitch.com.

Soil Type	Drilling Fluid Recommendation
Smooth, flowing sand	Bentonite or premixed bentonite + medium chain polymer
Coarse sand or light soil	Bentonite or premixed bentonite
Heavy or swelling clay	Long chain polymer + wetting agent
Rock	Premixed bentonite

Mixtures

IMPORTANT:

- If chemicals are added in the wrong order, they will not mix properly and will form clumps.
- If tank contains bentonite/polymer mix and more drilling fluid is needed, completely empty tank and start with fresh water before mixing another batch.
- See "Mix Fluid" on page 41 for more information.

Bentonite does not mix well in water containing polymer. To use both, mix bentonite first, then add polymer. When adding other products follow the order listed below.

1. Soda ash
2. Bentonite
3. Polymer
4. Wetting agent

Some things to remember when mixing bentonite:

- Use clean water free of salt, calcium, or excessive chlorine.
- Use water with pH level between 9 and 10.
- Use water with hardness of less than 120ppm.
- Do not use bentonite containing sand.
- Mix bentonite thoroughly or it will settle in tank.
- Do not mix bentonite to a funnel viscosity of over 50. See "Funnel Viscosity" on page 46.

Funnel Viscosity

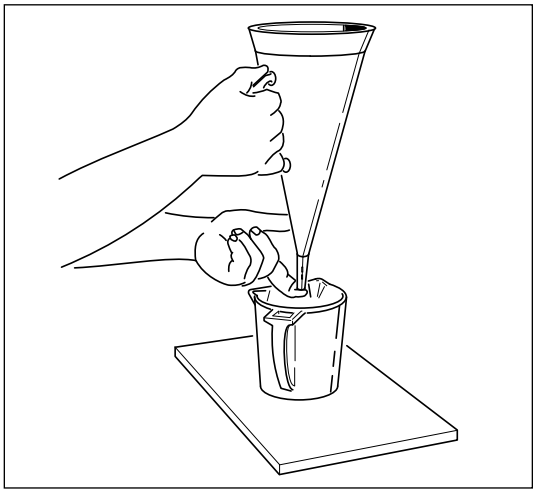
j07om033c.eps

Viscosity is the measure of internal resistance of a fluid to flow; the greater the resistance, the higher the viscosity. Viscosity of drilling fluids must be controlled. Contact your Ditch Witch® dealer or drilling fluid representative for more information.

To determine viscosity, you will need a Marsh funnel (p/n 259-267) and a measuring cup, available from your Ditch Witch dealer.

IMPORTANT: Ensure Marsh funnel is clean and free of obstruction and that you have a stopwatch available for timing the viscosity.

1. Using a clean container, take a fresh sample of drilling fluid. The sample must be at least 1.5qt (1.4L).
2. With finger over bottom of funnel, fill with fluid from the container through the screen until fluid reaches the bottom of the screen.
3. Move funnel over 1qt (0.95L) container.
4. Remove finger from bottom of funnel and use the stopwatch to count the number of seconds it takes for 1qt (0.95L) of fluid to pass through the funnel. The number of seconds is the viscosity.
5. Thoroughly rinse measuring cup and Marsh funnel.

Complete the Job

Chapter Contents



For additional precautions, see "Safety Awareness" and "Prepare" chapters.

Rinse Equipment 48

Disconnect 48

Stow Tools 48

Decommission Machine 48

Rinse Equipment

Spray water onto equipment to remove dirt and mud.

Disconnect

Disconnect and store hoses and cables.

Stow Tools

Ensure all tools and accessories are loaded and properly secured on trailer.

Decommission Machine

Before decommissioning machine, follow local regulations for disposing of hazardous substances. For more information on draining fluids, see Maintenance chapter or contact your Ditch Witch dealer.

Maintenance

Chapter Contents



For additional precautions, see "Safety" and "Prepare" chapters.

Maintenance Precautions 50

- Washing Precaution 50
- Welding Precaution 51

Recommended Lubricants 51

- Engine Oil Temperature Chart 52
- Approved Coolant 52
- Approved Fuel 53

Maintenance Interval Chart 54

Procedures 55

Maintenance Precautions



⚠WARNING Jobsite hazards. Exposure can cause death or serious injury. Use correct equipment and work methods. Use and maintain appropriate safety equipment.

To help avoid injury:

- Wear personal protective equipment including hard hat, safety eye wear, foot protection, hearing protection, and gloves (except when near rotating equipment).
- Remove jewelry.
- Wear close-fitting, high visibility clothing.
- Have other personal protective equipment, such as insulated boots and gloves, breathing protection, and face shield, etc. available for use depending on jobsite hazards or requirements.

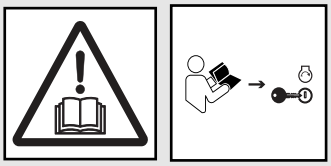

⚠WARNING Misuse of machine can cause death or serious injury. Read and understand operator's manual and all other safety instructions before use. Know how to use all controls.

To help avoid injury:

- Unless otherwise instructed, all maintenance should be performed with the engine off and cool.
- Unless otherwise instructed, all maintenance should be performed with machine parked on level surface.
- Refer to US Occupational Safety and Health Administration (OSHA) guidelines for appropriate lockout-tagout procedures.

Washing Precaution

NOTICE: Water can damage electronics. When cleaning equipment, do not spray electrical components with water.

Welding Precaution

NOTICE: Welding can damage electronics.

- Welding currents can damage electronic components. Connect welder ground close to welding point and make sure no electronic components are in the ground path.
- Disconnect battery at battery disconnect switch before welding to prevent damage to battery.
- Never turn off battery disconnect switch with engine running, or alternator and other electronic equipment devices may be damaged.

Recommended Lubricants

Item	Description
DEAC	Diesel engine antifreeze/coolant meeting ASTM See "Approved Coolant" on page 52.
DEO	**HRC:** Diesel engine oil meeting or exceeding API service classification CH-4 (CH-4, CI-4, or CJ-4) or ACEA E7 (E6, E7, or E9). • API American Petroleum Institute, ACEA European Automobile Manufacturer's Association • See "Engine Oil Temperature Chart" on page 52.
DEO	**LRC:** Diesel engine oil compatible with the sulfur content of the fuel used. • If fuel sulfur content exceeds 500ppm (500mg/kg), DEO base number (TBN) should exceed 10. • If fuel sulfur content exceeds 5000ppm (5000mg/kg), service interval is reduced to every 50 hours. • See "Engine Oil Temperature Chart" on page 52.
MPG	Multipurpose grease meeting ASTM D217 and NLGI 5
THF	Tractor hydraulic fluid, Phillips 66® PowerTran XP Fluid or equivalent

Proper lubrication and maintenance protects Ditch Witch equipment from damage and failure. Maintenance intervals listed are for minimum requirements. In extreme conditions, service machine more frequently. Use only genuine Ditch Witch parts, filters, approved lubricants, TJC, and approved coolants to maintain warranty. Fill to capacities listed in "Specifications" on page 17.

For more information on engine lubrication and maintenance, see your engine manual.

Engine Oil Temperature Chart

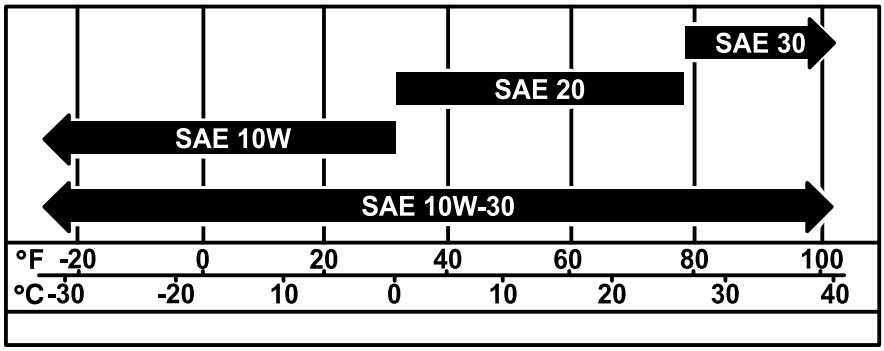

t10om043h.eps

Temperature range anticipated before next oil change

Approved Coolant

NOTICE:

- Use only pre-diluted coolant or concentrated coolant mixed with distilled water. Do not use tap water.
- Using water or high-silicate automotive-type coolant will lead to engine damage or premature engine failure.
- Mixing heavy-duty diesel engine coolant and automotive-type coolants will lead to coolant breakdown and engine damage.

This machine was filled with Fleetguard® ES Compleat™ coolant (blue in color) before shipment from factory. This coolant is available, pre-diluted, from your Ditch Witch dealer as part number 255-1055. Add or replace only with coolant meeting ASTM D6210.

Approved Fuel

HRC (Highly Regulated Countries)

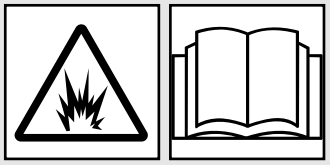

⚠ WARNING Ultra Low Sulfur Diesel (ULSD) poses a greater static ignition hazard than earlier diesel formulations with higher sulfur content. Avoid death or serious injury from fire or explosion; consult with your fuel or fuel system supplier to ensure the delivery system is in compliance with fueling standards for proper grounding and bonding practices.

This engine is designed to run on diesel fuel. Use only high quality fuel meeting ASTM D975 No. 2D, EN590, or equivalent. At temperatures below 32°F (0°C) winter fuel blends are acceptable. See the engine operation manual for more information.

NOTICE: Use only Ultra Low Sulfur Diesel (less than 15ppm sulfur content in the US and Canada or 10mg/kg in EU and Japan) in this machine. Operating with higher sulfur content will damage the engine and aftertreatment device.

Biodiesel blends up to 5% (B5) are approved for use in this machine. The fuel must meet the specifications for diesel fuel shown above. In certain markets, higher blends may be used if certain steps are taken. Extra attention is needed when using biodiesel, especially when operating in cold weather or storing fuel. Contact your Ditch Witch dealer or the engine manufacturer for more information.

LRC (Less Regulated Countries)

This engine is designed to run on diesel fuel. Use only high quality fuel meeting ASTM D975 No. 2D, EN590, or equivalent. At temperatures below 32°F (0°C) winter fuel blends are acceptable. See the engine operation manual for more information.

NOTICE: Worldwide, fuel sulfur regulations vary widely. Fuel used should always comply with local regulations. Prior to shipping, LRC machines were filled with API CJ-4 DEO. If using fuel with sulfur content above 15ppm (15mg/kg), change oil initially at 250 hours.

Biodiesel blends up to 5% (B5) are approved for use in this machine. The fuel must meet the specifications for diesel fuel shown above. In certain markets, higher blends may be used if certain steps are taken. Extra attention is needed when using biodiesel, especially when operating in cold weather or storing fuel. Contact your Ditch Witch dealer or the engine manufacturer for more information.

Maintenance Interval Chart

IMPORTANT: Chart indicates first instance of repeated maintenance procedures. See detailed information below.

▽ Adjust, service, or test	□ Change, initial	○ Lube, initial
▲ Check	■ Change	● Lube

Service	10 Hours	50 Hours	100 Hours	150 Hours	250 Hours	500 Hours	2000 Hours	As Needed
Battery	▲							▽
Belt, fan			▲			■		▽
Belt, pump drive						■		▽
Coolant	▲						■	
Filter, air		▲			■			
Filter, fuel			■					
Oil, engine	▲	□		■				
Pump		●						
Radiator		▲						▽

Procedures

Battery



WARNING Corrosive fluid. Contact can cause death or serious injury. Avoid contact. Wear appropriate gloves. See Safety Data Sheet (SDS) for more information.

To help avoid injury:

- Never attempt to charge a battery that is leaking, bulging, heavily corroded, frozen, or otherwise damaged.
- Refer to Safety Data Sheet (SDS) for additional information regarding battery.

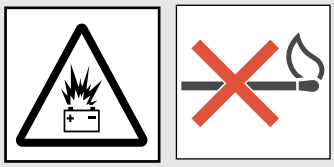

WARNING Explosive hydrogen gas. Fire or explosion can cause death or serious injury. Keep heat flames, sparks, and other sources of ignition away.

To help avoid injury:

- Use a single 12V maximum source for charging. Never connect to rapid chargers or dual batteries.
- Never lean over battery when making connections.
- Never allow vehicles to touch when charging.
- Never short-circuit battery terminals for any reason or strike battery posts or cable terminals.
- Refer to Safety Data Sheet (SDS) for additional information regarding battery.

NOTICE:

- Electronic components can be easily damaged by electrical surges. Jump starting can damage electronics and electrical systems, and is not recommended. Try to charge the battery instead. Use quality large diameter jumper cables capable of carrying high currents (400 amps or more). Low quality cables may not allow enough current flow to charge a dead/discharged battery.
- Read all steps thoroughly and review illustration before performing procedure.

Check battery every 10 hours. Charge as needed.

Check

1. Turn battery disconnect switch, if equipped, off.
2. Ensure that no ignition sources are near battery.
3. Loosen and remove battery cable clamps carefully, negative (-) cable first.
4. Clean cable clamps and terminals to remove dull glaze.
5. Check for signs of internal corrosion in cables.
6. Connect battery cable clamps, positive (+) cable first.
7. Tighten any loose connections.
8. Ensure that battery tiedowns are secure.
9. Turn battery disconnect, if equipped, on.

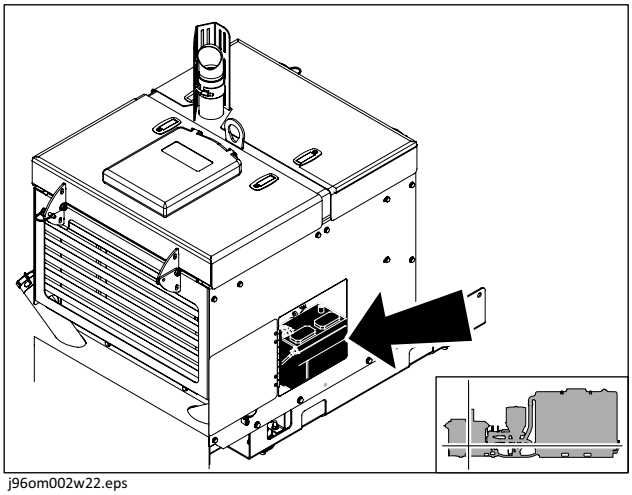
j96om002w22.eps

Charge

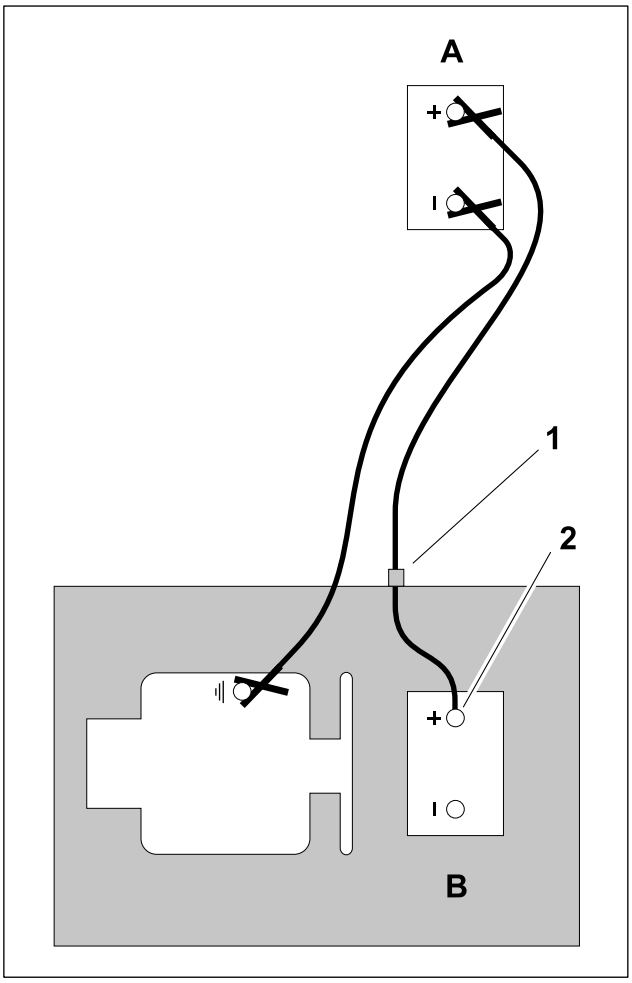

Battery_Jumpstart_B.eps

1. Park service vehicle close to disabled equipment but do not allow vehicles to touch.
2. Engage parking brake in both vehicles.
3. Turn ignition switch off in both vehicles and turn off all electrical loads.
4. Disconnect machine controller, if equipped.
5. Inspect battery in disabled machine (B) for signs of cracking, bulging, leaking, or other damage.
6. Connect red positive (+) jumper cable clamp to positive (+) post of battery (2) in disabled machine.

   IMPORTANT: Some equipment may have a positive jumper cable terminal (1) located externally. If so equipped, connect red positive (+) jumper cable clamp to terminal.

7. Connect the other red positive (+) jumper cable clamp to positive (+) post of battery in service vehicle (A).
8. Connect black negative (-) cable clamp to negative (-) post of battery in service vehicle.
9. Connect the other black negative (-) cable clamp to engine or frame ground on disabled machine, at least 12" (305 mm) from failed battery, as shown.
10. Operate service vehicle engine at 1500-2000 rpm for a few minutes to build an electrical charge in failed battery.
11. Stop engine in service vehicle.
12. Remove jumper cables from service vehicle, black negative (-) clamp first. Do not allow clamps to touch.
13. Remove black negative (-) cable clamp from disabled engine or frame ground.
14. Remove red positive (+) cable clamp from disabled machine.
15. Reconnect machine controller, if equipped.
16. Start disabled machine.

Belt, Fan

Check fan belt tension every 100 hours. Adjust as needed. Change belt every 500 hours.

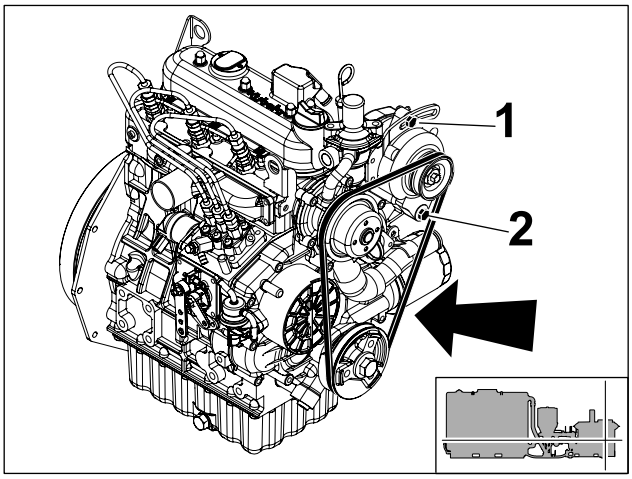

j96om003w22.eps

Check Tension

1. Turn off engine and remove key.
2. Apply moderate thumb pressure to top of belt where shown.

   Belt is properly tensioned when deflection (A) is 1/4-3/8" (5-13mm).
3. If needed, loosen alternator bolts (1,2) and pull alternator out until correct tension is reached.
4. Tighten bolts.

Change

1. Loosen bolts (1,2) and remove belt.
2. Install new belt and adjust tension properly.

Belt, Pump

Check pump belt tension every 100 hours. Adjust as needed. Change belt every 500 hours.

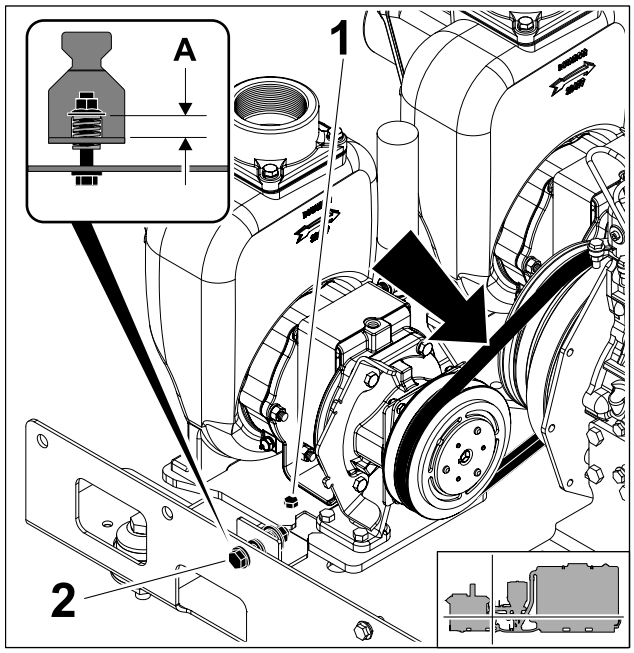

j96om004w22.eps

Check Tension

1. Turn off engine and remove key.
2. Apply moderate thumb pressure to top of belt where shown.

   Belt is properly tensioned when deflection (A) is 1/4-1/2" (5-13mm).
3. If needed, loosen two bolts (1, other bolt is on other side of pump mount plate) until pump slides freely.
4. Adjust bolt (2) to increase or decrease tension. When washer is aligned with cutout and dimension A (shown) is 3/4" (19mm), tension is correct.
5. Once correct tension is reached, tighten bolts.

Change

1. Loosen three bolts (1,2, third bolt is on other side of pump mount plate) and remove belt.
2. Install new belt and adjust properly.

Coolant

Check every 10 hours. Change every 2000 hours.

Check

1. Check level at overflow bottle.
2. Add DEAC at fill (shown) as needed to keep level between LOW and FULL marks on overflow bottle.

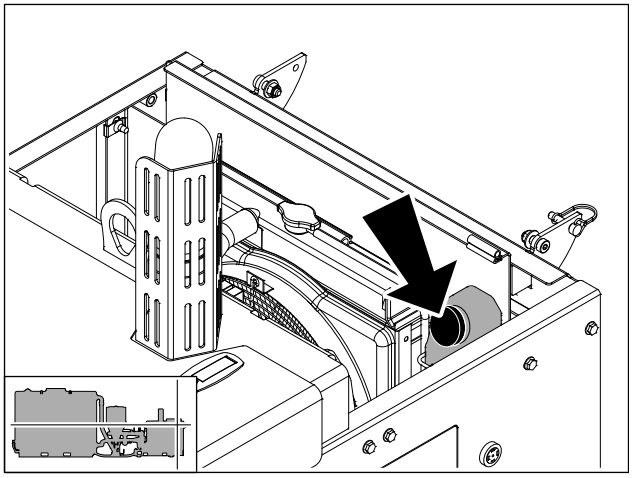
j96om005w22.eps

Change

1. Open drain (2).
2. Close drain when reservoir is empty.
3. Add DEAC at fill (1) to keep level between LOW and FULL marks on overflow bottle.

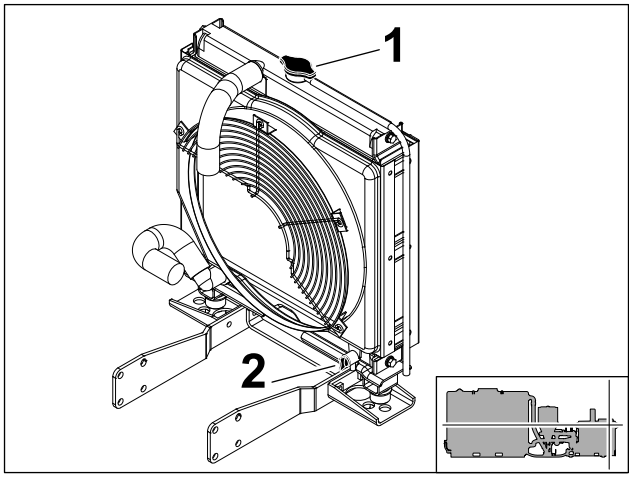

j96om006w22.eps

Filter, Air

Check before startup. Change element anytime it is dirty or damaged or every 250 hours.

1. Open air filter housing at latches (1).
2. Remove primary (2) and secondary (3) elements.
3. Wipe inside of housing and wash end cup.
4. If elements are dirty, insert new primary and secondary elements.
5. Close air filter cover.

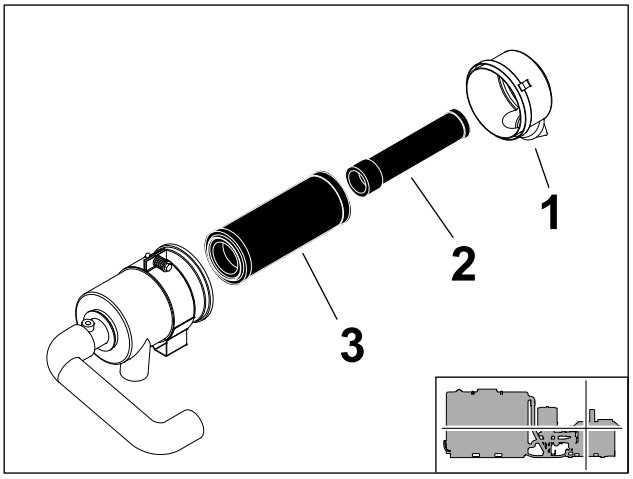

j96om007w22.eps

Filter, Fuel

Change fuel filter (1) and inline filter (2) every 100 hours.

1. Remove filters.
2. Fill new filter with clean fuel.
3. Apply fuel oil over the gasket and hand-tighten.

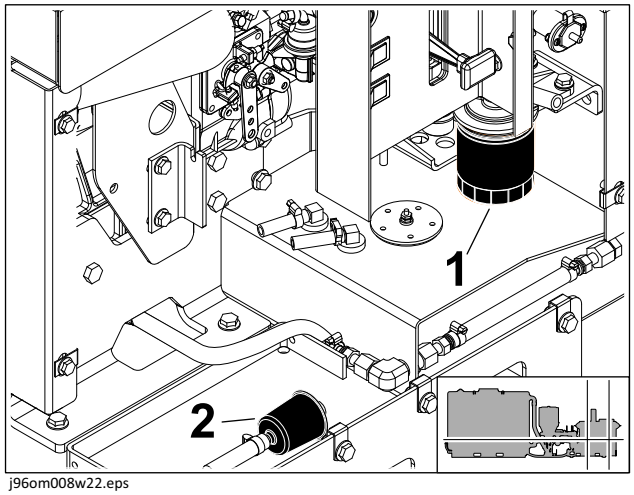

j96om008w22.eps

Oil, Engine

IMPORTANT: Do not overfill.

Check before startup. Change at 50 hours and every 150 hours thereafter.

Check

1. Check at dipstick (1).
2. Add DEO at fill (2) as needed to keep level at highest line on dipstick.

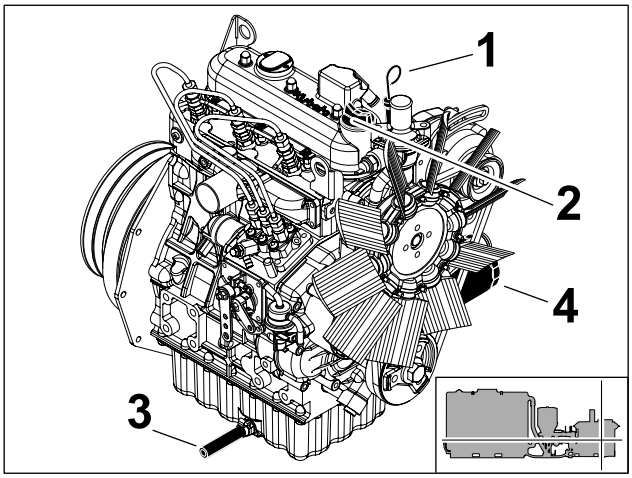

j96om009w22.eps

Change

1. While oil is warm, remove plug (3) to drain.
2. Remove filter (4).
3. Install new filter
4. Install plug.
5. Slowly add DEO at fill until level is at highest line on dipstick.

Pump

Lube with MPG at zerk (2) every 50 hours, until grease comes out of relief valve (1).

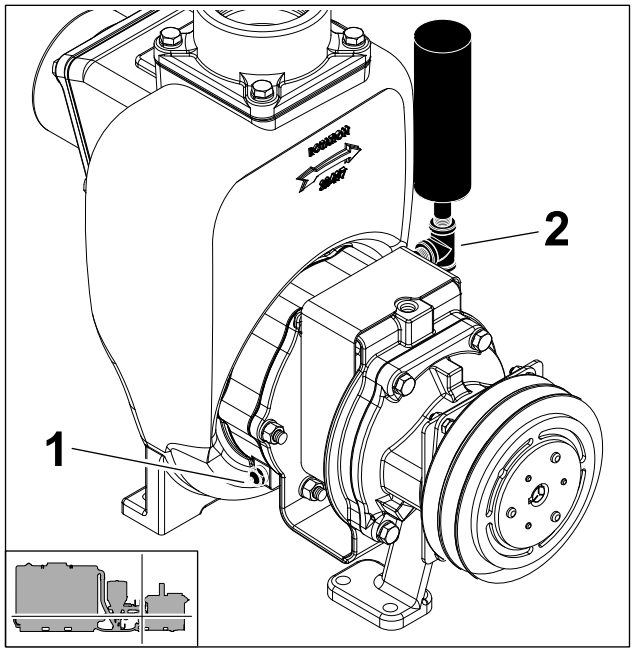

j96om010w22.eps

Radiator

NOTICE: Radiator may need to be cleaned more often in dusty or grassy conditions.

Check every 50 hours. Clean as needed.

Check

Check radiator (shown) for dirt, grass, and other debris. Check radiator hoses for wear. Check hose clamps for proper tightness.

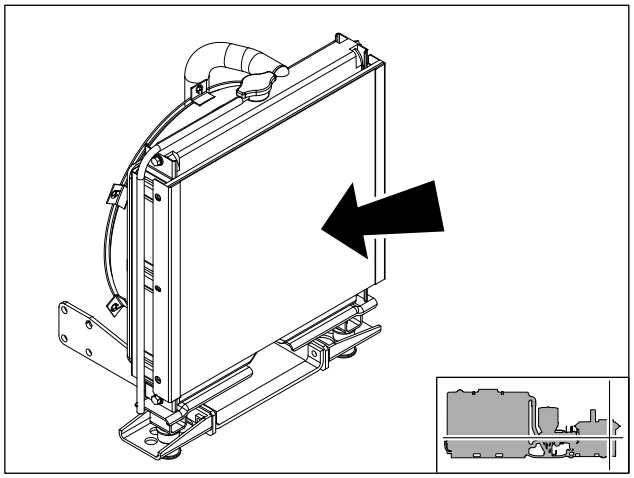
j96om011w22.eps

Clean

1. Clean fins with compressed air or spray wash.

   NOTICE: Cleaning with high pressure air or water can damage fins.

2. Open rear hood and spray through radiator toward engine.
3. If grease and oil are present on radiator, spray with solvent and allow to soak overnight.

Specifications

Specifications are called out according to SAE recommended practices. Specifications are general and subject to change without notice. If exact measurements are required, equipment should be weighed and measured. Due to selected options, delivered equipment may not match that shown.

Chapter Contents

FM25/FM25X 18

- Pumping/Power Unit 18
- 500-gal (1892-L) Tank 19
- 950-gal (3596-L) Tank 20
- System 21

EU Declaration of Conformity 23

UK Declaration of Conformity 24

FM25/FM25X

Pumping/Power Unit

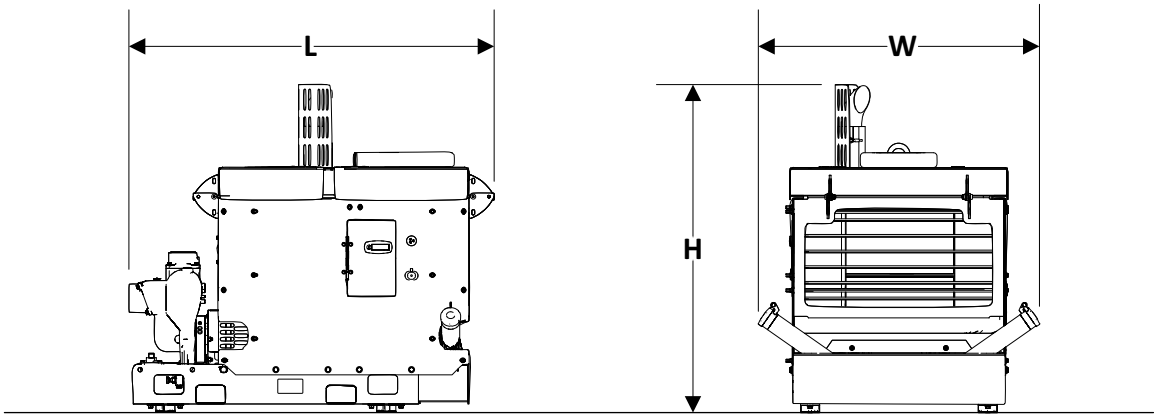

j69om001h22.eps

Dimensions		US	Metric
H	Height	45in	1.4m
L	Length	53in	1.35m
W	Width	41in	1.04m

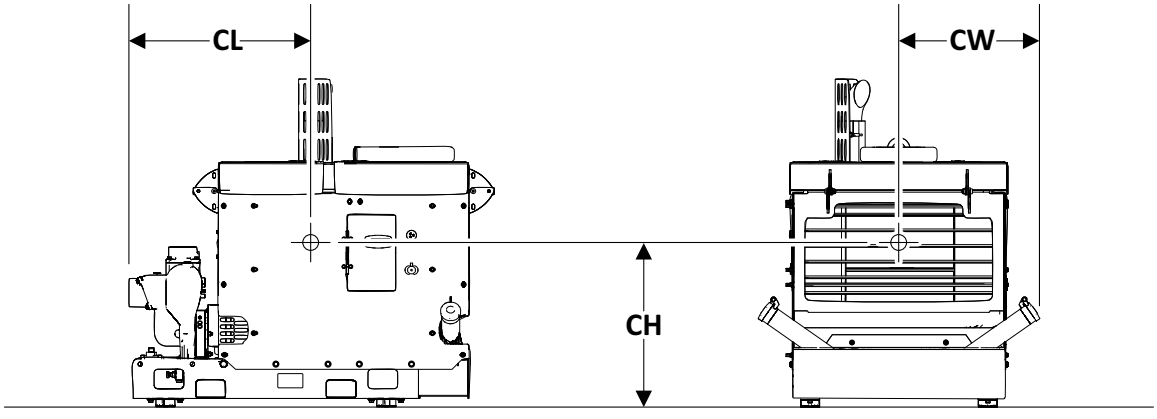

j69om002h22.eps

Center of gravity (CG)	US	Metric
CH	14in	356mm
CL	30in	762mm
CW	20in	508mm

500-gal (1892-L) Tank

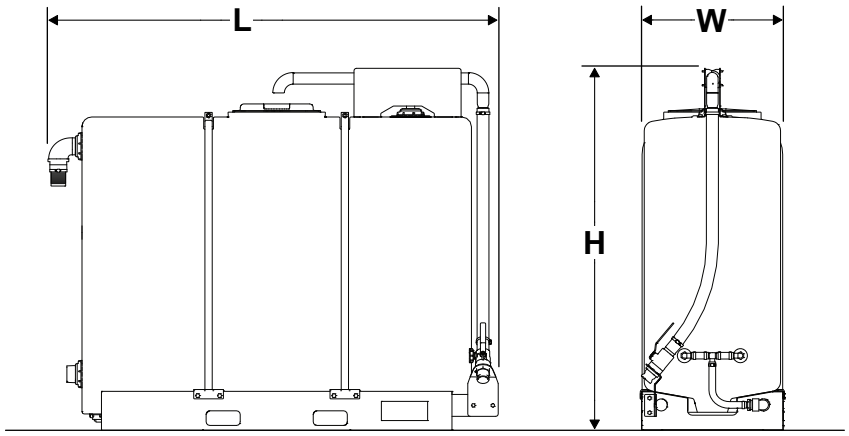

j65om003w19.eps

Dimensions		US	Metric
H	Height		
	with fill pipe	80in	2.03m
	without fill pipe	72in	1.83m
L	Length	92in	2.34m
W	Width	29in	0.74m

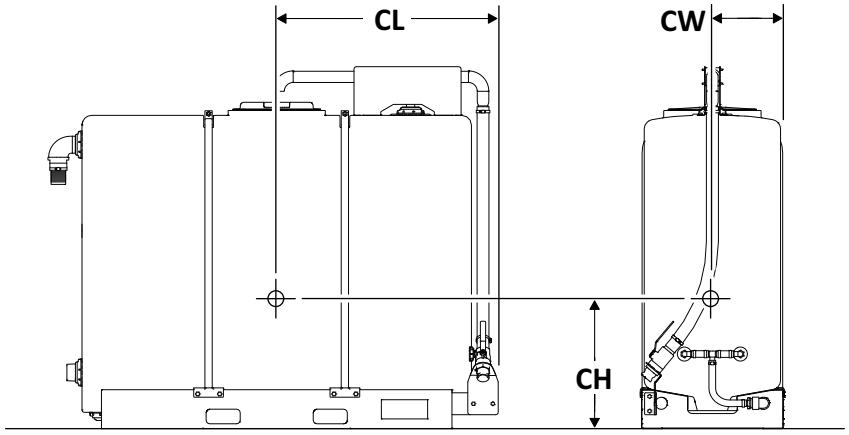

j65om007w19.eps

Center of gravity (CG), full tank	US	Metric
CH	34.5in	876mm
CL	39.5in	1.0m
CW	15in	382mm

IMPORTANT: Contact trailer manufacturer for tank placement recommendations.

950-gal (3596-L) Tank

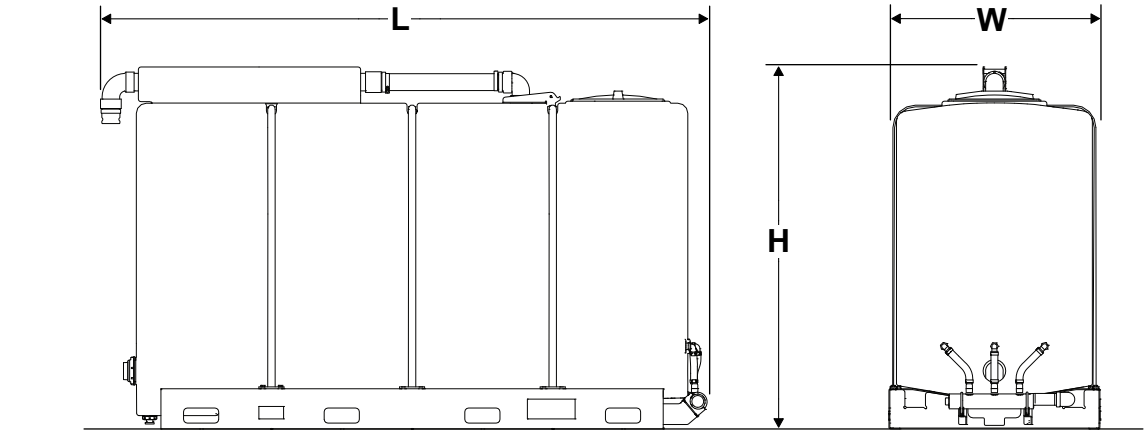

j65om004w19.eps

Dimensions		US	Metric
H	Height		
	with fill pipe	80in	2.03m
	without fill pipe	72in	1.83m
L	Length	205in	5.21m
W	Width	96in	2.44m

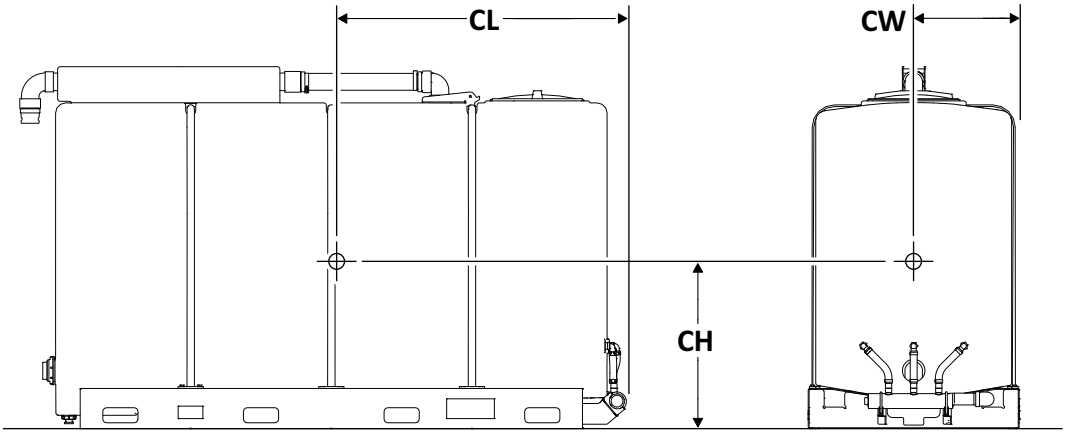

j65om008w19.eps

Center of gravity (CG), full tank	US	Metric
CH	33.8in	859mm
CL	54in	1.4m
CW	21in	533mm

IMPORTANT: Contact trailer manufacturer for tank placement recommendations.

System

Operation	US	Metric
Weight, pumping/power unit	1150lb	522kg
Weight, 950-gal (3596-L) tank with hoses	1000lb	454kg
Weight, 950-gal (3596-L) system, full tank	8933lb	4052kg
Weight, 500-gal (1890-L) tank with hoses	500lb	227kg
Weight, 500-gal (1890-L) system, full tank	4650lb	2109kg

Performance	US	Metric
Centrifugal pump suction port diameter	3in	76mm
Centrifugal pump discharge port diameter	3in	76mm
Fluid pressure, max	50psi	3.4bar
Pump discharge rate, max, water (each pump)	300gpm	1100L/min
Flow rate to drilling unit with 42 viscosity fluid @ 30psi (2.1bar) through 3"x 50' (76mm x 15m hose), max	0-200gpm	0-750L/min
Drilling fluid tank capacity, nominal, each tank	500/950gal	1892/3596L
Solids addition rate with metering plate	30lb/min	14kg/min
Solids addition rate without metering plate	75lb/min	34kg/min
Dry mixing hopper capacity	$1ft^3$	28L
Typical tank mixing time	7-10min	

Engine		**US**	**Metric**
Kubota D1105 (EPA Tier 4 Final, EU Stage V)			
	Fuel	Diesel	
	Cooling medium	Water	
	Injection	Indirect	
	Aspiration	Natural	
	Number of cylinders	3	
	Displacement	68.5in³	1.12L
	Bore	3.07in	78.0mm
	Stroke	3.09in	78.4mm
Manufacturer's gross power rating (per SAE J1995; begins with serial number DWPFM25XLTDR00893)		23.3hp	17.4kW
Manufacturer's gross power rating (per SAE J1995)		24.8hp	18.5kW
Rated speed		3000rpm	3000rpm

Fluid Capacities	**US**	**Metric**
Engine oil, with filter	3.5qt	3.3L
Fuel tank	9.2gal	35L

Noise Level	
Operator sound pressure per ISO 6393	77 dBA ± 3
Exterior sound power per ISO 6393	105 dBA ± 2dBA
Actual noise emission in jobsite conditions could be different. Always wear appropriate hearing protection when operating the machine.	

EU Declaration of Conformity

The Charles Machine Works Inc., PO Box 66, 1959 West Fir Avenue, Perry, Oklahoma, USA, declares that the following unit(s):

Model	**Serial Number**	**Description**
XXXXX	XXXXXXXXXXXXXXXX	Drilling Fluid System

Conform(s) to the following directives:

2006/42/EC (Machinery Directive) and 2014/30/EU (Electromagnetic Compatibility Directive)

Each model listed has been evaluated with the following standards and/or other normative documents:

EN 16228-1:2014
EN ISO 13766-1:2018

The Technical Construction File is maintained at the manufacturer's location. The Authorized representative designated below is authorized to make the technical file available to the competent authorities of the Member States in response to a duly reasoned request.

This declaration has been issued under the sole responsibility of the manufacturer.
The object of the declaration is in conformity with relevant Union harmonization legislation.

Certified:

Engineering Director
1959 West Fir Avenue
Perry, OK 73077, USA

Date _____

Authorized Representative:

Marcel Dutrieux
Manager European Product Integrity
Toro Europe NV
Nijverheidsstraat 5
2260 Oevel
Belgium

UK Declaration of Conformity

The Charles Machine Works Inc., PO Box 66, 1959 West Fir Avenue, Perry, Oklahoma, USA, declares that the following unit(s):

Model	Serial Number	Description
XXXXX	XXXXXXXXXXXXXXXX	Drilling Fluid System

Conform(s) to the following UK national laws:

S.I. 2008 No.1597 (Machinery Safety), and S.I. 2016 No.1091 (EMC).

Each model listed has been evaluated with the following standards and/or other normative documents:

EN 16228-1:2014
EN ISO 13766-1:2018

The Technical Construction File is maintained at the manufacturer's location. The Authorized representative designated below is authorized to make the technical file available to the competent authorities of the Member States in response to a duly reasoned request.

This declaration has been issued under the sole responsibility of the manufacturer.
The object of the declaration is in conformity with relevant UK legislation.

Certified:

Authorized Representative:

Marcel Dutrieux
Manager European Product Integrity
Toro U.K. Limited
Spellbrook Lane West
Bishop's Stortford
CM23 4BU
United Kingdom

Engineering Director
1959 West Fir Avenue
Perry, OK 73077, USA

Date _____

Support

Registration

If your equipment was purchased through a Ditch Witch dealer, it is already registered. If you purchased from any other source, please email productsupportwarrantyadmin@ditchwitch.com or fill out the registration card located in the back of the parts manual. Registration enables you to receive updates on this equipment as well as information on new products of interest.

Procedure

Notify your dealer immediately of any malfunction or failure of Ditch Witch equipment.

Always give model, serial number, and approximate date of your equipment purchase. This information should be recorded and placed on file by the owner at the time of purchase.

Return damaged parts to dealer for inspection and warranty consideration if in warranty time frame.

Order genuine Ditch Witch replacement or repair parts from your authorized Ditch Witch dealer. Use of another manufacturer's parts may void warranty consideration.

Resources

Publications

Contact your Ditch Witch dealer for publications and videos covering safety, operation, maintenance, and repair of your equipment.

Ditch Witch Training

For information about on-site individualized training, contact your Ditch Witch dealer.

Warranty

Ditch Witch Equipment and Replacement Parts
Limited Warranty Policy

Subject to the limitation and exclusions herein, free replacement parts will be provided at any authorized Ditch Witch dealership for any Ditch Witch equipment or parts manufactured by the Ditch Witch factory that fail due to a defect in material or workmanship within one (1) year of first commercial use. Free labor will be provided at any authorized Ditch Witch dealership for installation of parts under this warranty during the first year following "initial commercial" use of the serial-numbered Ditch Witch equipment on which it is installed. The customer is responsible for transporting their equipment to an authorized Ditch Witch dealership for all warranty work.

Exclusions from Product Warranty

- All incidental or consequential damages.
- All defects, damages, or injuries caused by misuse (including, but not limited to, rollover), abuse, improper installation, alteration, neglect, or uses other than those for which products were intended.
- All defects, damages, or injuries caused by improper training, operation, or servicing of products in a manner inconsistent with manufacturer's recommendations.
- All engines and engine accessories (these are covered by original manufacturer's warranty).
- Tires, belts, and other parts which may be subject to another manufacturer's warranty (such warranty will be available to purchaser).
- ALL IMPLIED WARRANTIES NOT EXPRESSLY STATED HEREIN, INCLUDING ANY WARRANTY OF FITNESS FOR A PARTICULAR PURPOSE AND MERCHANTABILITY.

IF THE PRODUCTS ARE PURCHASED FOR COMMERCIAL PURPOSES, AS DEFINED BY THE UNIFORM COMMERCIAL CODE, THEN THERE ARE NO WARRANTIES WHICH EXTEND BEYOND THE FACE HEREOF AND THERE ARE NO IMPLIED WARRANTIES OF ANY KIND WHICH EXTEND TO A COMMERCIAL BUYER. ALL OTHER PROVISIONS OF THIS LIMITED WARRANTY APPLY INCLUDING THE DUTIES IMPOSED.

Ditch Witch products have been tested to deliver acceptable performance in most conditions. This does not imply they will deliver acceptable performance in all conditions. Therefore, to assure suitability, products should be operated under anticipated working conditions prior to purchase.

Defects will be determined by an inspection within thirty (30) days of the date of failure of the product or part by Ditch Witch Product Support (DWPS) or its authorized dealer. DWPS will provide the location of its inspection facilities or its nearest authorized dealer upon inquiry. DWPS reserves the right to supply remanufactured replacements parts under this warranty as it deems appropriate.

Extended warranties are available upon request from your local Ditch Witch dealer or the Ditch Witch factory.

Some states do not allow exclusion or limitation of incidental or consequential damages, so above limitation of exclusion may not apply. Further, some states do not allow exclusion of or limitation of how long an implied warranty lasts, so the above limitation may not apply. This limited warranty gives product owner specific legal rights and the product owner may also have other rights which vary from state to state.

For information regarding this limited warranty, contact the DWPS department, P.O. Box 66, Perry, OK 73077-0066, or contact your local dealer.

First version: 1/91; Latest version: 7/19