JT24

Cummins® F3.8

Operator's Manual



CMW®

Issue 4.1
Original Instruction

053-3180

Overview

Chapter Contents

Serial Number Location 2

Intended Use 3

Equipment Modification 3

Machine Components 4

Regulatory Notices 5

RF Exposure Statement 5

Operator Orientation 6

Operating Area 6

About This Manual 7

- Bulleted Lists 7
- Numbered Lists 7

California Proposition 65

⚠WARNING Diesel engine exhaust and some of its constituents are known to the State of California to cause cancer, birth defects, and other reproductive harm. www.P65warnings.ca.gov.

Serial Number Location

Record serial numbers and date of purchase in spaces provided. Serial number is located as shown.

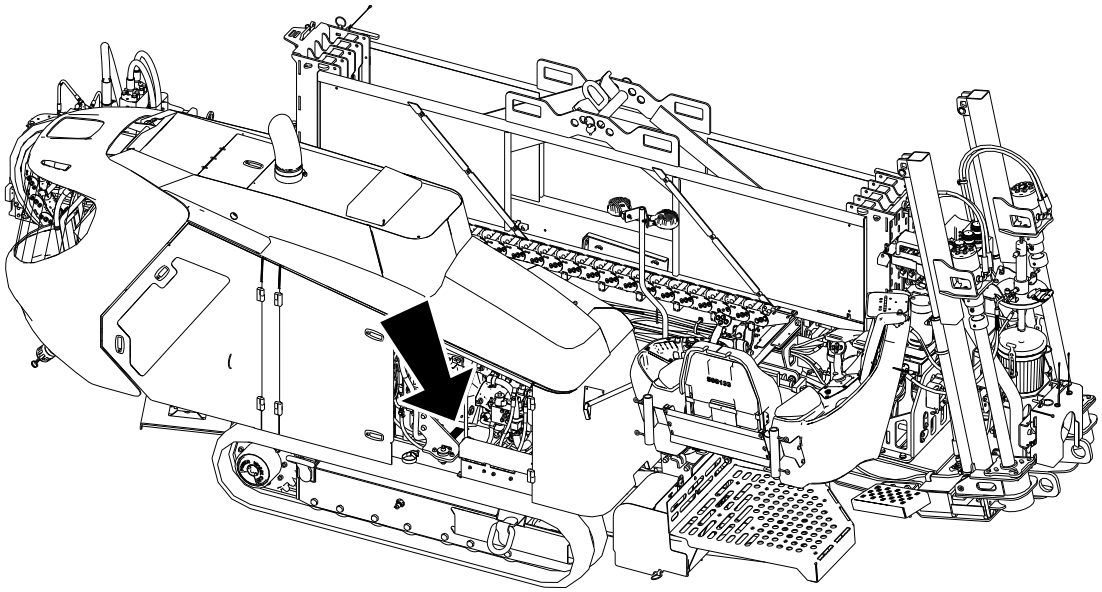

j79om001h19.eps

Item	
Date of manufacture	
Date of purchase	
Machine serial number	

Intended Use

The JT24 is a self-contained horizontal directional drill designed to install buried cable and pipe to distances of 400-600' (122-183 m) depending on diameter of drill pipe and soil conditions.

This machine is intended for operation only according to the instructions in this manual. Operate machine in ambient temperatures from 10° to 115°F (-12° to 46°C). Contact your Ditch Witch® dealer for provisions required for operating in extreme temperatures. Use in any other way is considered contrary to the intended use.

This machine should be used with genuine Ditch Witch fluid machines and Subsite® tracking equipment. It should be operated, serviced, and repaired only by professionals familiar with its particular characteristics and acquainted with the relevant safety procedures.

Equipment Modification

This equipment was designed and built in accordance with applicable standards and regulations. Modification of equipment could mean that it will no longer meet regulations and may not function properly or in accordance with the operating instructions. Modification of equipment should only be made by competent personnel possessing knowledge of applicable standards, regulations, equipment design functionality/requirements and any required specialized training.

Machine Components

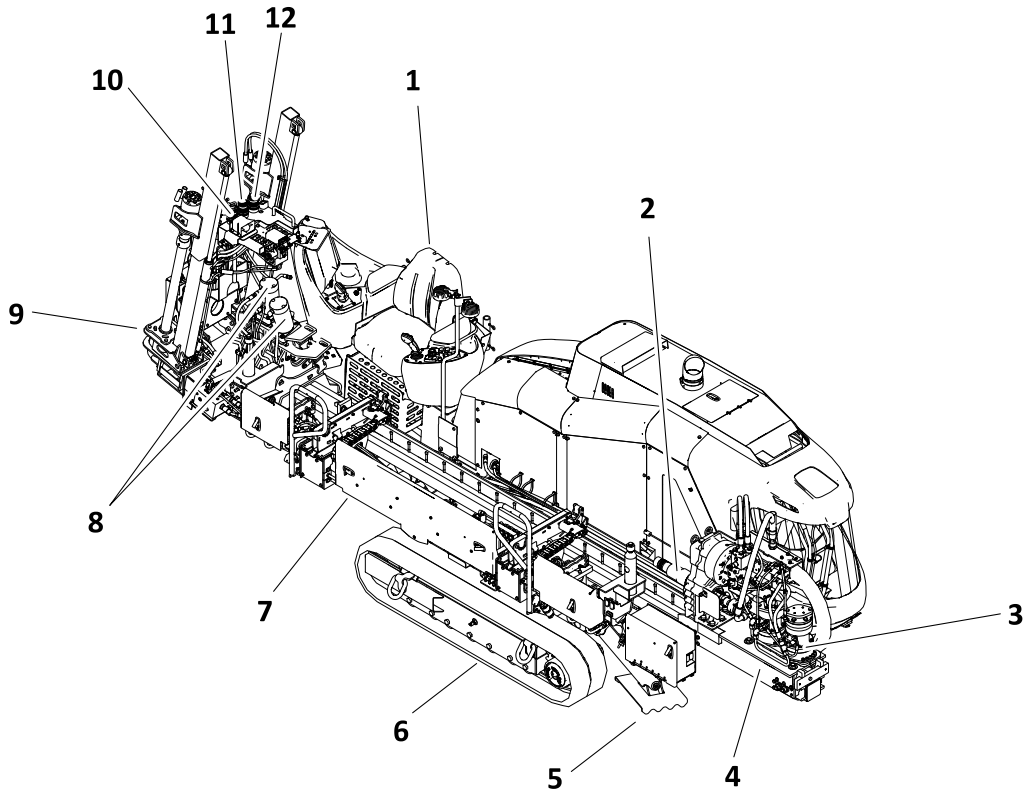

j79om002h19.eps

1. Operator station
2. Spindle
3. Carriage
4. Drill frame
5. Stabilizer
6. Tracks
7. Pipe loader
8. Wrenches
9. Anchoring system
10. Wireless remote control indicator (clear)
11. DrillLok® indicator (green)
12. ESID strobe indicator (amber)

Regulatory Notices

United States

This device complies with Part 15 of the FCC Rules. Operation is subject to the following conditions: (1) this device may not cause harmful interference, and (2) this device must accept any interference received, including interference that may cause undesired operation. Changes or modifications not expressly approved by **The Charles Machine Works, Inc.** could void the user's authority to operate the equipment.

This device has been tested and found to comply with the limits for a Class A digital device, pursuant to Part 15 of the FCC rules. These limits are designed to provide reasonable protection against harmful interference when the equipment is operated in a commercial environment. This equipment generates, uses, and can radiate radio frequency energy, and, if not installed and used in accordance with the instructions, can cause harmful interference to radio communications. Operation of this equipment in a residential area could cause harmful interference which the user will be required to correct at his own expense. Changes or modifications not expressly approved by **The Charles Machine Works, Inc.** could void the user's authority to operate the equipment.

This equipment has been tested and found to comply with the limits for a Class B digital device, pursuant to Part 15 of the FCC rules. These limits are designed to provide reasonable protection against harmful interference in a residential installation. This equipment generates, uses and can radiate radio frequency energy and, if not installed and used in accordance with the instructions, may cause harmful interference to radio communications. However, there is no guarantee that interference will not occur in a particular installation. If this equipment does cause harmful interference to radio or television reception, which can be determined by turning the equipment off and on, the user is encouraged to try to correct the interference by one or more of the following measures:

- Reorient or relocate the receiving antenna.
- Increase the separation between the equipment and receiver.
- Connect equipment into an outlet on a circuit different from that to which the receiver is connected.
- Consult the dealer or an experienced radio/TV technician for help.

Contains FCC ID: ITQ-TR2I & KQL-RM02410.

Canada

CAN ICES-2/NMB-2

This device complies with Industry Canada *license-exempt* RSS standard(s). Operation is subject to the following two conditions: (1) this device may not cause interference, and (2) this device must accept any interference, including interference that may cause undesired operation of the device.

Contains IC: 3598A-TR2I & 2268C-RM02410.

Le présent appareil est conforme aux CNR d'Industrie Canada applicables aux appareils radio exempts de licence. L'exploitation est autorisée aux deux conditions suivantes: (1) l'appareil ne doit pas produire de brouillage, et (2) l'appareil doit accepter tout brouillage radioélectrique subi, même si le brouillage est susceptible d'en compromettre le fonctionnement.

Contient IC: 3598A-TR2I & 2268C-RM02410.

RF Exposure Statement

In order to comply with RF exposure requirements during normal operation, this device must be held in front of the body horizontally. The antenna must be vertical in line with the body with at least 4" (100mm) separation distance from the body.

This device complies with Health Canada's Safety Code Section 6.

Operator Orientation

IMPORTANT: Top view of machine is shown.

1. Front
2. Right side
3. Rear
4. Left side

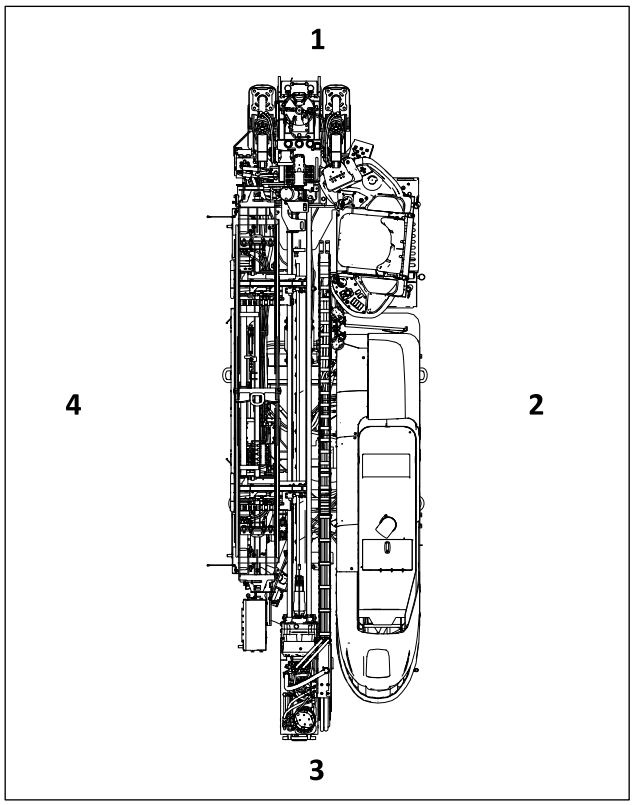

j79om003h19.eps

Operating Area

When using remote to drive and set up, keep machine within sight at all times. Keep a safe distance away from machine when operating remote control. Operate drilling functions only from seat.

About This Manual

This manual contains information for the proper use of this machine. Cross references such as "See page 50" will direct you to detailed procedures.

Bulleted Lists

Bulleted lists provide helpful or important information or contain procedures that do not have to be performed in a specific order.

Numbered Lists

Numbered lists contain illustration callouts or list steps that must be performed in order.

Foreword

This manual is an important part of your equipment. It provides safety information and operation instructions to help maintain your Ditch Witch® equipment.

Read this manual before using your equipment. Keep it with the equipment at all times for future reference. If you sell your equipment, be sure to give this manual to the new owner.

If you need a replacement copy, contact your Ditch Witch dealer. If you need assistance in locating a dealer, visit our website at www.ditchwitch.com or write to the following address:

The Charles Machine Works, Inc.
ATTN: Marketing Department
PO Box 66
Perry, OK 73077-0066
USA

The descriptions and specifications in this manual are subject to change without notice. The Charles Machine Works, Inc. reserves the right to improve equipment. Some product improvements may have taken place after this manual was published. For the latest information on Ditch Witch equipment, see your Ditch Witch dealer.

Thank you for buying and using Ditch Witch equipment.

JT24
Operator's Manual

Cummins F3.8

Issue number 4.1/OM-03/25
Part number 053-3180

Copyright 2019, 2020, 2023, 2025
by The Charles Machine Works, Inc.

 and Ditch Witch are registered trademarks of The Charles Machine Works, Inc. Other trademarks and trade names are those of their respective owners.

This product and its use may be covered by one or more patents at http://charlesmachine.works/patents.

Contents

Overview 1

machine serial number, information about the type of work this machine is designed to perform, basic machine components, and how to use this manual

Foreword 9

part number, revision level, and publication date or this manual, and factory contact information

Safety 13

machine safety alerts and emergency procedures

Prepare 23

procedures for preparing jobsite, preparing operator, and preparing equipment

Controls 41

machine controls, gauges and indicators and how to use them

Drive 89

procedures for startup, cold start, driving, and shutdown

Transport 95

procedures for lifting, hauling, and towing

Conduct a Bore 101

procedures for drilling and backreaming

Systems and Equipment 123

information about anchors, cruise control, downhole tools, drill pipe, drilling fluid, DrillLok® system, electric strike system, and wireless remote control

Complete the Job 161

procedures for restoring the jobsite and rinsing and storing equipment

Maintenance 165

service intervals and instructions for this machine including lubrication, replacement of wear items, and basic maintenance

Specifications 201

machine specifications including weights, measurements, power ratings, and fluid capacities

Support 209

the warranty policy for this machine and procedures for obtaining warranty consideration and training

Safety

Chapter Contents



For additional precautions, see "Prepare" chapter.

Safety Alert Classification 14

Guidelines 15

Emergency Procedures 16

- Electric Strike Description 16
- If an Electric Line is Damaged 17
- If a Gas Line is Damaged 17
- If a Fiber Optic Cable is Damaged 18
- If Machine Catches on Fire 18

Machine Safety Alerts 19

Safety Alert Classifications

These classifications and the icons defined on the following pages work together to alert you to situations which could be harmful to you, jobsite bystanders or your equipment. When you see these words and icons in the book or on the machine, carefully read and follow all instructions. YOUR SAFETY IS AT STAKE.

Watch for the three safety alert levels: **DANGER**, **WARNING** and **CAUTION**. Learn what each level means.

⚠ DANGER indicates a hazardous situation that, if not avoided, will result in death or serious injury. This signal word is to be limited to the most extreme situations.

⚠ WARNING indicates a hazardous situation that, if not avoided, could result in death or serious injury.

⚠ CAUTION indicates a hazardous situation that, if not avoided, could result in minor or moderate injury.

Watch for two other words: ***NOTICE*** and **IMPORTANT**.

NOTICE indicates information considered important, but not hazard-related (e.g., messages relating to property damage).

IMPORTANT can help you do a better job or make your job easier in some way.

Guidelines



WARNING Misuse of machine can cause death or serious injury. Read and understand operator's manual and all other safety instructions before use. Know how to use all controls.

Follow these guidelines before operating any jobsite equipment:

- Complete proper training.
- Read and understand operator's manual before using equipment.
- Wear personal protective equipment including long pants, hard hat, eye protection, hearing protection, and protective footwear.
- Do not wear jewelry or loose clothing.
- Mark proposed path with white paint and have underground utilities located before working. In the US or Canada, call 811 (US) or 888-258-0808 (US and Canada). Also contact any local utilities that do not participate in the One-Call service. In countries that do not have a One-Call service, contact all local utility companies to have underground utilities located.
- Classify jobsite based on its hazards and use correct tools and machinery, safety equipment, and work methods for jobsite.
- Mark jobsite clearly and keep spectators away.
- Review jobsite hazards, safety and emergency procedures, and individual responsibilities with all personnel before work begins. Safety videos are available from your Ditch Witch dealer or at www.ditchwitch.com/safety. Safety Data Sheets (SDS) are available at www.ditchwitch.com/support.
- Ensure jobsite is adequately lit. Arrange for secondary light sources as needed.
- Complete the equipment checklist located at www.ditchwitch.com/safety.
- Fully inspect equipment before operating. Repair or replace any worn or damaged parts. Replace missing or damaged safety shields and safety alert signs. Contact your Ditch Witch dealer for assistance.
- Follow instructions on all safety alert signs on machine.
- Keep access steps and platforms clean and free of obstacles and debris.
- Use equipment carefully per the instructions in this manual. Stop operation and investigate anything that does not look or feel right.
- Do not operate machine where flammable gas may be present.
- Only operate equipment in well ventilated areas.
- Always tie down equipment and properly stow accessories, even if traveling short distances.
- Contact your Ditch Witch dealer if you have any questions about operation, maintenance, or equipment use.

Emergency Procedures



WARNING Underground utilities. Contact can cause death or serious injury. Locate and verify underground utilities before digging or drilling.

Before operating any equipment, review emergency procedures and check that all safety precautions have been taken.

EMERGENCY SHUTDOWN: Shut off machine or press remote engine stop button or emergency stop button (if equipped).

Electric Strike Description

When working near electric cables, remember the following:

- Electricity follows all paths to ground, not just path of least resistance.
- Pipes, hoses, and cables will conduct electricity back to all equipment.
- Low voltage current can injure or kill. Many work-related electrocutions result from contact with less than 440 volts.

Most electric strikes are not noticeable, but indications of a strike include:

- power outage
- smoke
- explosion
- popping noises
- arcing electricity

If any of these occur, or if strike alarm sounds or flashes, assume an electric strike has occurred.

If an Electric Line is Damaged

If you suspect an electric line has been damaged, DO NOT MOVE. Take the following actions. The order and degree of action will depend on the situation.

- If you are **on machine or bonded equipment:**
  - REMAIN ON MACHINE.
  - Reverse drilling direction and try to break contact. Do not touch drill pipe with hands or hand-held tools.
  - Press electric strike system test button.
  - If alarm sounds again, stay where you are and wait for electric company to shut off power.
  - If alarm does not sound or there is no other indication of a strike, wait at least one full minute before moving away from equipment. Utility might use automatic reclosers which will restart current flow.
  - If alarm sounds again while waiting, stay where you are until electric company shuts off power.
  - If alarm does not sound but all lights in strike indicator are on, assume strike is continuing and stay where you are until electric company shuts off power.
- If you are **off the machine or bonded equipment,** DO NOT TOUCH ANY EQUIPMENT connected to machine**:**
  - If you must leave the area, take small steps with feet close together to reduce the hazard of being shocked from one foot to the other.
  - If you leave, do not return to area or allow anyone into area until given permission by electric company.
- Warn people nearby that an electric strike has occurred. Instruct them to leave the area.
- Have someone contact electric company to shut off power.
- Do not resume drilling or allow anyone into area until given permission by electric company.

If a Gas Line is Damaged

If you suspect a gas line has been damaged, take the following actions. The order and degree of action will depend on the situation.

- Immediately shut off engine(s), if this can be done safely and quickly.
- Remove any ignition source(s), if this can be done safely and quickly.
- Warn others that a gas line has been cut and that they should leave the area.
- After warning others to leave the area, leave jobsite as quickly as possible.
- Immediately call your local emergency phone number and utility company.
- If jobsite is along street, stop traffic from driving near jobsite.
- Do not return to jobsite until given permission by emergency personnel and utility company.

If a Fiber Optic Cable is Damaged

Do not look into cut ends of fiber optic or unidentified cable. Vision damage can occur. Contact utility company.

If Machine Catches on Fire

Perform emergency shutdown procedure and then take the following actions. The order and degree of action will depend on the situation.

- Immediately move battery disconnect switch (if equipped and accessible) to disconnect position.
- If fire is small and fire extinguisher is available, attempt to extinguish fire.
- If fire cannot be extinguished, leave area as quickly as possible and contact emergency personnel.

Machine Safety Alerts

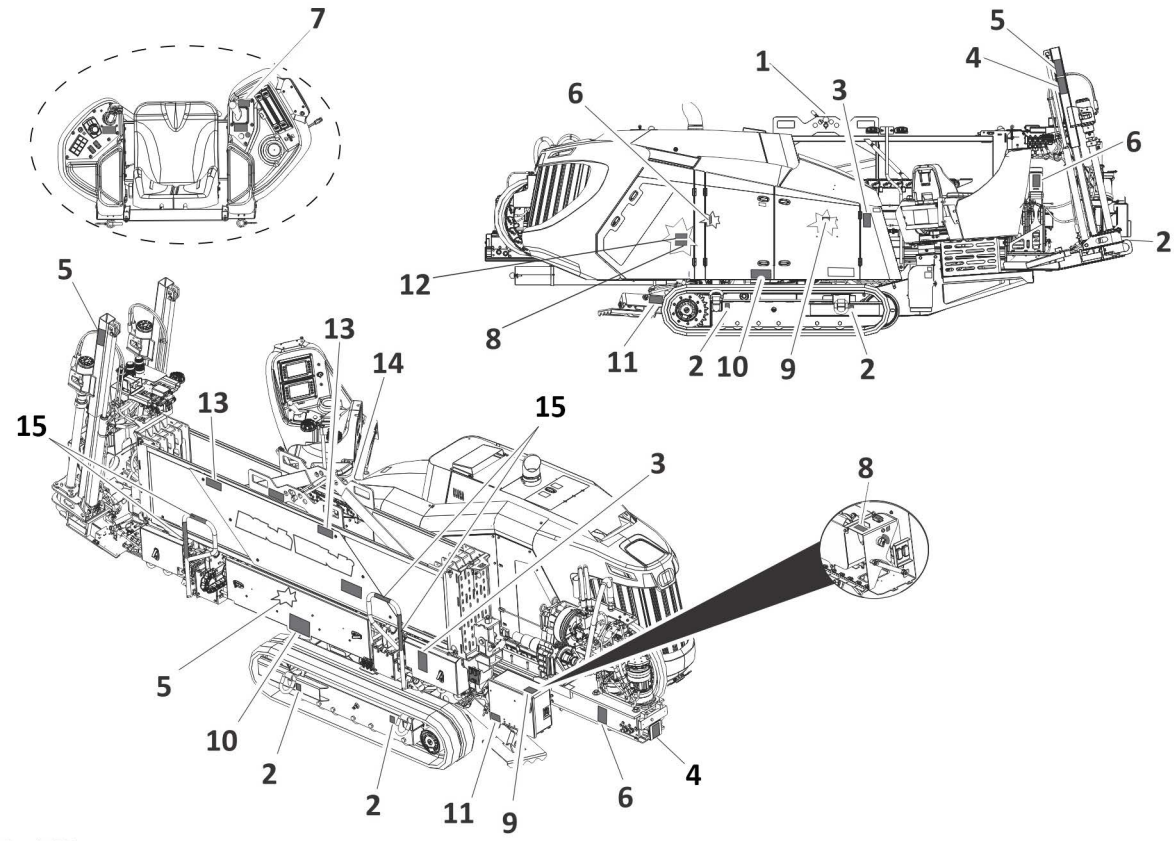

1	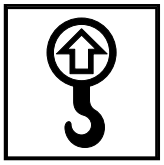	Lift point. See Transport chapter for more information.
2		Tiedown location. See Transport chapter for more information.
3	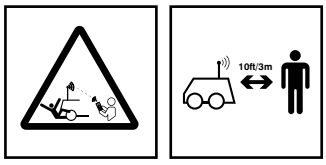	**⚠ CAUTION** Remote-controlled equipment. Impact can cause death or serious injury. Stay away.

4		**DANGER** Moving or thrown tools. Impact will cause death or serious injury. Never use pipe wrenches on drill string. Follow procedure in operator's manual.
5	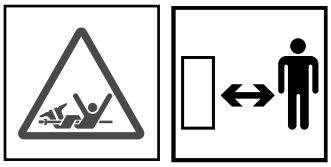	**DANGER** Rotating shaft. Crushing will cause death or serious injury. Stay away.
6	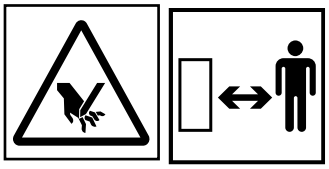	**WARNING** Moving parts. Contact can cause serious injury. Stay away.
7	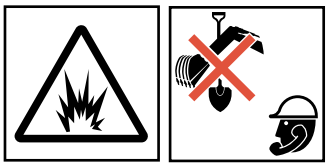	**WARNING** Underground utilities. Contact can cause death or serious injury. Locate and verify underground utilities before digging or drilling.
8	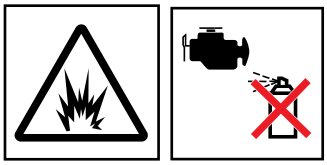	**WARNING** Pre-heater. Fire or explosion can cause death or serious injury. Never use starter fluid.
9	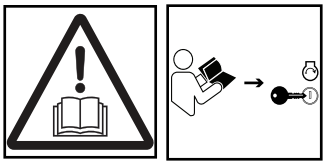	**WARNING** Misuse of machine can cause death or serious injury. Read and understand operator's manual and all other safety instructions before use. Know how to use all controls.
10	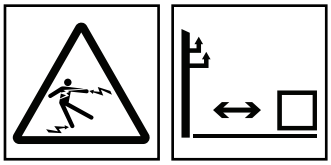	**DANGER** Buried electrical lines. Contact will cause death or serious injury. Know location of lines. Stay away.
11	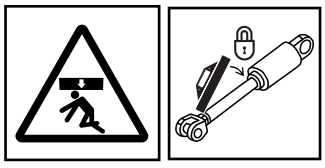	**WARNING** Raised component. Crushing can cause death or serious injury. Stay away or secure raised component with locking device. Use correct equipment and procedures.

12	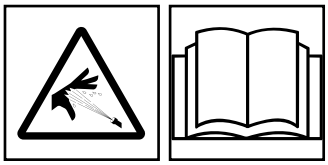	**WARNING** Pressurized fluid or air. Contact can cause death or serious injury. Refer to operator's manual for correct use.
13	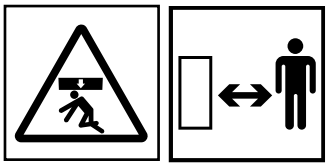	**WARNING** Lifted load. Crushing can cause death or serious injury. Stay away from lifted load and its range of movement.
14	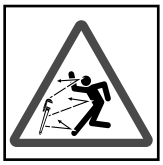	**WARNING** Ejected pipe. Impact can cause death or serious injury. Only operate with guard installed.
15		DANGER stripe decal. See Parts Manual for replacement part numbers.

Prepare

Chapter Contents



See "Safety" for additional precautions.

Wear proper personal protective equipment.

Prepare Jobsite 24

- Review Job Plan 24
- Select Start and End Points 24
- Identify Hazards 25
- Locate Utilities 26
- Classify Jobsite 27
- Arrange for Traffic Control 29
- Plan Bore Path 29
- Examine Pullback Material 36
- Prepare Entry Point 36

Prepare Operator 37

Prepare Equipment 38

- Check Supplies 38
- Check Equipment 39
- Assemble Accessories 40

Prepare Jobsite



WARNING Underground utilities. Contact can cause death or serious injury. Locate and verify underground utilities before digging or drilling.

To help avoid injury:

- Expose lines by careful hand digging or soft excavation before operating equipment. Use appropriate equipment and procedures for exposing utility lines.
- All vegetation near operator's station must be removed. Contact with trees, shrubs, or weeds during electrical strike could result in electrocution.
- Classify jobsite and follow precautions based on classification.
- Follow local regulations for digging near utilities.

A successful job begins before working. The first step in planning is reviewing information already available about the job and jobsite.

Review Job Plan

Review blueprints or other plans and make sure you have taken bore enlargement during backreaming and pullback into account. Check for information about existing or planned structures, elevations, or proposed work that may be taking place at the same time.

Select Start and End Points

Select one end to use as a starting point. Consider the following when selecting a starting point:

Slope

Equipment should be parked on a level site. Consider how slope will affect setup and operation. Assess the risks on each slope to determine if factors affecting risks create an unsafe condition for working. See "Slope Guidelines" on page 108.

Space

Check that starting and ending points allow enough space for working. See "Minimum Setback" on page 34.

Comfort

Consider shade, wind, fumes, and other site features.

Drill downhill when possible so fluid will flow away from drilling unit.

Identify Hazards

Inspect jobsite before transporting equipment. Check for the following:

- overall grade or slope
- changes in elevation such as hills or open trenches
- obstacles such as buildings, railroad crossings, or streams
- signs of utilities
  - "buried utility" notices
  - gas or water meters
  - drop boxes
  - manhole covers
  - utility facilities without overhead lines
  - junction boxes
  - light poles
  - sunken ground
- traffic
- access
- soil type and condition
- water supply
- sources of locator, tracker, or guidance equipment interference (rebar, railroad tracks, etc.)

> ***NOTICE:*** All tracking equipment is subject to magnetic interference. The presence of interference can cause inaccuracies in both location and depth calculations. See tracker or locator operator's manual for more information.

Take soil samples from several locations along bore path to determine best bit and backreamer combinations.

Locate Utilities

Notify One-Call Services

Mark proposed path with white paint and have underground utilities located before working.

- In the US or Canada, call 811 (US) or 888-258-0808 (US and Canada). Also contact any local utilities that do not participate in the One-Call service.
- In countries that do not have a One-Call service, contact all local utility companies to have underground utilities located.

Verify Underground Utilities

Have an experienced locating equipment operator sweep area within 20' (6 m) to each side of proposed excavation to verify previously marked line and cable locations. Mark location of all buried utilities and obstructions.

Locate Overhead Lines

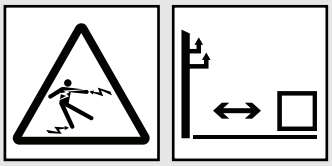

DANGER Overhead electrical lines. Contact will cause death or serious injury. Know location of lines. Stay away.

Note location and height of all overhead lines in jobsite and ensure that equipment maintains proper distance from live lines.

Classify Jobsite

Select a Classification

Jobsites are classified according to underground hazards present, not by line being installed. Jobsite may have more than one classification.

If working . . .	then classify jobsite as . . .
within 10' (3 m) of a buried electric line	electric
within 10' (3 m) of a natural gas line	natural gas
in concrete, sand, or granite which is capable of producing crystalline silica dust	crystalline silica dust
within 10' (3 m) of any other hazard	other

Classify jobsite as electric if jobsite is in question or if the possibility of unmarked electric utilities exists.

Apply Precautions



⚠ WARNING Underground utilities. Contact can cause death or serious injury. Locate and verify underground utilities before digging or drilling.

Once classified, precautions appropriate for jobsite must be taken. Follow US Department of Labor regulations on excavating and trenching (Part 1926, Subpart P) and other similar regulations.

Electric Jobsite Precautions

In addition to using a directional drilling system with an electric strike system, use one or both of these methods:

- Expose line by careful hand digging or soft excavation. Use beacon to track bore path. If utility must be crossed, tracker operator must watch the drill head during drilling and backreaming. The tracker operator must have communication with the drill operator or DrillLok system must be enabled with the DrillLok key in the tracker operator's possession.
- Have service shut down while work is in progress. Have electric company test lines before returning them to service.

Natural Gas Jobsite Precautions

Position equipment upwind from gas lines and use one or both of these methods:

- Expose line by careful hand digging or soft excavation. Use beacon to track bore path. If utility must be crossed, tracker operator must watch the drill head during drilling and backreaming. The tracker operator must have communication with the drill operator or DrillLok system must be enabled with the DrillLok key in the tracker operator's possession.
- Have service shut down while work is in progress. Have gas company test lines before returning them to service.

Crystalline Dust Jobsite Precautions

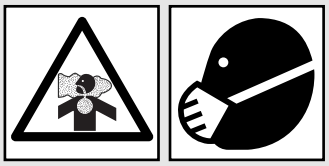

⚠ CAUTION Silica dust. Exposure can cause lung disease or cancer. Use breathing protection.

Crystalline silica dust is a naturally occurring substance found in soil, sand, concrete, granite, and quartz.

To reduce exposure when cutting, drilling, or working these materials:

- Use water spray or other means to control dust.
- Refer to US Occupational Safety and Health Administration (OSHA) guidelines or other applicable regulating guidelines for appropriate breathing protection or dust control methods.

Other Jobsite Precautions

You may need to use different methods to safely avoid other underground hazards. Talk with those knowledgeable about hazards present at each site to determine which precautions should be taken or if job should be attempted.

Clear objects such as landscaping fabric, cable, and wire from the work area. These objects may be underground or partially buried.

Arrange for Traffic Control

Vehicle and pedestrian traffic must be a safe distance from equipment. Evaluate jobsite and allow an appropriate buffer zone around equipment. If working near a road or other traffic area, contact local authorities about safety procedures and regulations.

Plan Bore Path

Plan the bore path, from entry to end, before drilling begins. Subsite Electronics bore planning software is available for planning your bore path. This special software can be run in the field using a laptop computer or mobile device. See your Ditch Witch dealer for details.

NOTICE: If not using bore planning software, see "Bore Path Calculator" on page 35.

For complicated bores, consult an engineer. Have the jobsite surveyed and bore path calculated. Be sure the engineer knows minimum entry pitch, bend limits of drill pipe, bend and tension limits of pullback material, pipe lengths, and location of all underground utilities.

For less complicated bores, plan the bore based on four measurements:

- recommended bend limit
- entry pitch
- minimum setback
- minimum depth

Recommended Bend Limits

IMPORTANT: Consider recommended bend limits during any bend, not just during bore entry.

Ditch Witch drill pipes are designed to bend slightly during operation. Slight bending allows for steering and correcting direction. Bending beyond recommended limits will cause damage that might not be visible. This damage adds up and will later lead to sudden drill pipe failure.

Pipe Pitch

NOTICE: Bending drill pipe more sharply than recommended will damage pipe and cause failure over time. Maximum changes in pitch within 1-2' (300-600m) of pipe create sharp bends that will damage pipe.

Ditch Witch drill pipe is tested to bend at a maximum percent pitch.

Ensure pitch (A) changes no more than the following percentages over the full length of each pipe. Monitor the pitch of each pipe with tracker remote display on the operator's console. See tracking system operator's manual.

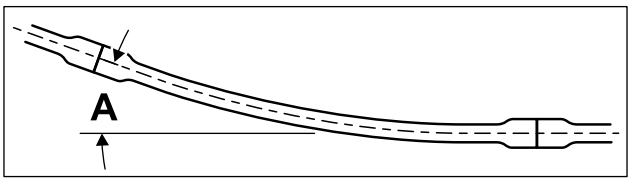

j07om003c.eps

Drill Pipe	Percentage
JT24 Power Pipe HD	8.6%
#600 HDX pipe	8.0%

Bend Radius

NOTICE: Bending drill pipe more sharply than recommended will damage pipe and cause failure over time. If bend radius is reduced, drill pipe life is reduced.

IMPORTANT: Use following charts to keep bends within safe limits.

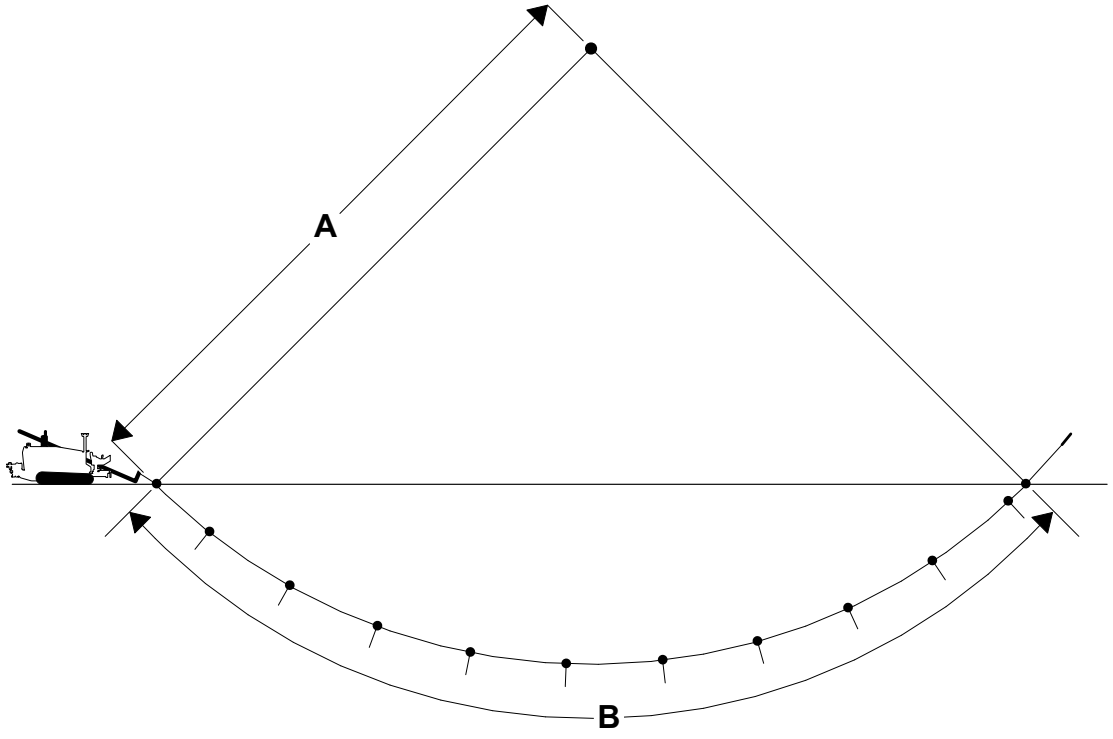

j07om004c.eps

Drill Pipe	Tested Minimum Bend Radius	Radius (A)*	Length Needed (B)*
JT24 Power Pipe HD	117' (35.7 m)	117' (35.7 m)	184' (56.1 m)
#600 HDX pipe	123' (37.5 m)	123' (37.5 m)	194' (59.1 m)

*Measurements are based on a 90° bend in the bore path.

Pipe-By-Pipe Bend Limits

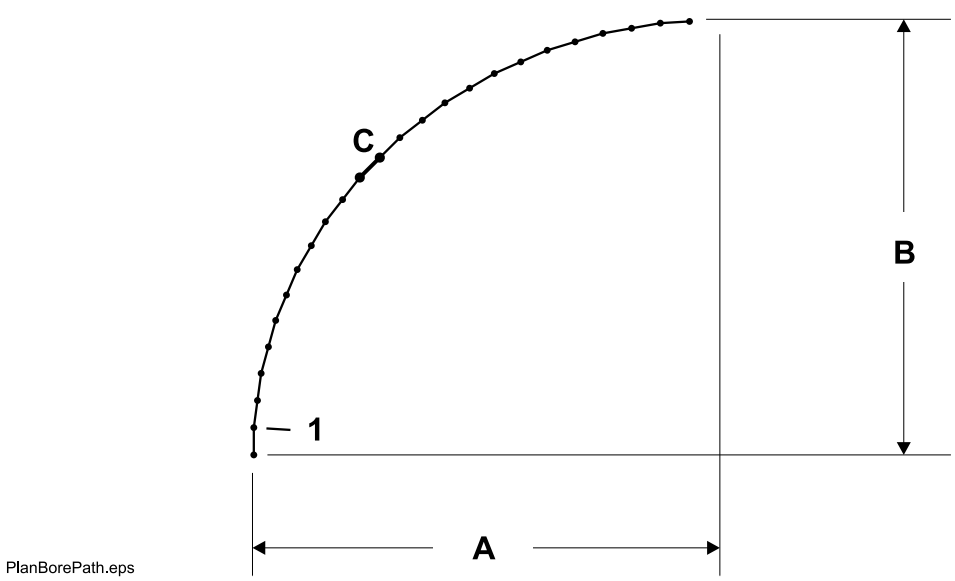

JT24 Power Pipe HD				
Pipe (C)	**Forward (B)**		**Deflection (A)**	
1	9’ 11.9”	3.05 m	0’ 5.1”	0.13 m
2	19’ 10.8”	6.07 m	1’ 8.5”	0.52 m
3	29’ 8.1”	9.05 m	3’ 9.9”	1.17 m
4	39’ 2.7”	11.96 m	6’ 9.3”	2.07 m
5	48’ 5.9”	14.78 m	10’ 6.4”	3.21 m
6	57’ 4.8”	17.50 m	15’ 0.8”	4.59 m
7	65’ 10.7”	20.08 m	20’ 4.1”	6.20 m
8	73’ 10.8”	22.53 m	26’ 3.9”	8.02 m
9	81’ 4.4”	24.80 m	32’ 11.6”	10.05 m
10	88’ 2.9”	26.90 m	40’ 2.7”	12.26 m
11	94’ 5.6”	28.79 m	48’ 0.6”	14.65 m
12	100’ 0.1”	30.48 m	56’ 4.4”	17.18 m
13	104’ 9.8”	31.95 m	65’ 1.6”	19.85 m
14	108’ 10.2”	33.18 m	74’ 3.4”	22.64 m
15	112’ 1.2”	34.17 m	83’ 8.8”	25.52 m
16	114’ 6.2”	34.91 m	93’ 5.2”	28.48 m

JT24 Power Pipe HD				
Pipe (C)	**Forward (B)**		**Deflection (A)**	
17	116' 1.3"	35.39 m	103' 3.7"	31.49 m
18	116' 10.1"	35.61 m	113' 3.3"	34.53 m
19	117'	35.66 m	117'	35.66 m

#600 HDX Pipe				
Pipe (C)	**Forward (B)**		**Deflection (A)**	
1	9' 11.9"	3.05 m	0' 4.9"	0.13 m
2	19' 11.0"	6.07 m	1' 7.4"	0.49 m
3	29' 8.5"	9.06 m	3' 7.5"	1.11 m
4	39' 3.6"	11.98 m	6' 5.1"	1.96 m
5	48' 7.7"	14.83 m	9' 11.9"	3.05 m
6	57' 8.0"	17.58 m	14' 3.6"	4.36 m
7	66' 3.7"	20.21 m	19' 3.9"	5.89 m
8	74' 6.2"	22.71 m	25' 0.4"	10.98 m
9	82' 2.8"	25.07 m	31' 4.7"	9.57 m
10	89' 4.9"	27.25 m	38' 4.2"	11.69 m
11	96' 0.0"	29.26 m	45' 10.4"	13.98 m
12	101' 11.5"	31.08 m	53' 10.7"	16.43 m
13	107' 3.0"	32.69 m	62' 4.5"	19.01 m
14	111' 10.1"	34.09 m	71' 3.1"	21.72 m
15	115' 8.3"	35.26 m	80' 5.8"	24.53 m
16	118' 9.5"	36.21 m	89' 11.8"	27.43 m
17	121' 1.3"	36.91 m	99' 8.5"	30.39 m
18	122' 7.5"	37.38 m	109' 7.1"	33.40 m
19	123' 4.1"	37.60 m	119' 6.8"	36.44 m
20	123' 4.5"	37.61 m	123' 4.5"	37.61 m

Entry Pitch

Entry pitch is the slope of the drill frame compared with the slope of the ground. Determine entry pitch one of the two following ways.

With Pitch Beacon

1. Lay pitch beacon on ground and read pitch. Record this number.
2. Lay pitch beacon on drill frame and read pitch. Record this number.
3. Subtract ground pitch from drilling unit pitch.

With Measurements

1. Measure from ground to front end of drill frame (H1).
2. Measure from ground to back end of drill frame (H2).
3. Subtract (H2-H1). Record this number.
4. Measure the distance between front and back points (C).
5. Divide distance (H2-H1) by C, then multiply by 100 as shown. This is the pitch.

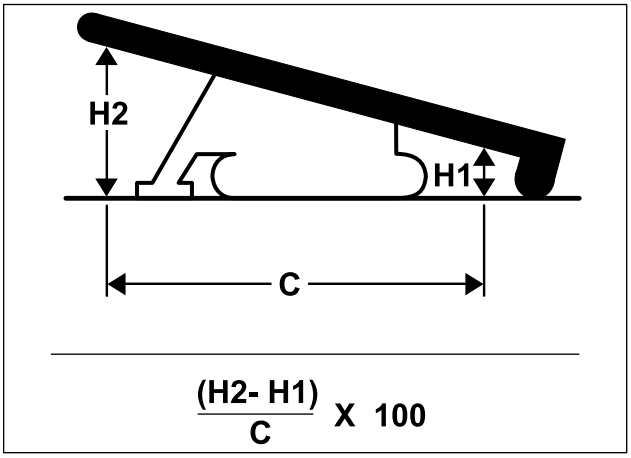

j07om006c.eps

Minimum Setback

Minimum setback is the distance from the entry point to where pipe becomes horizontal (A1).

IMPORTANT: If setback is too small (A2), bend limits of the pipe will be exceeded and the pipe will be damaged.

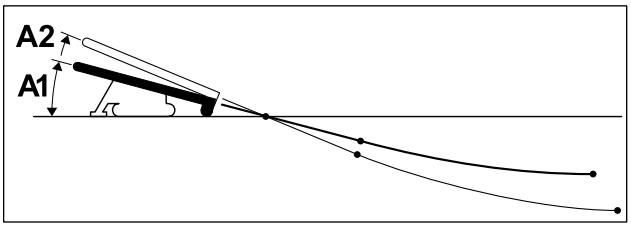

j07om007c.eps

A shallow entry pitch (B1) allows pipe to become horizontal sooner and with less bending. Increasing entry pitch (B2) creates a longer and deeper minimum setback.

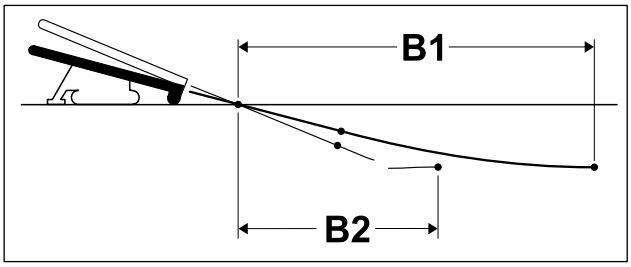

j07om008c.eps

Minimum Depth

Minimum depth is how deep the pipe will be when it becomes horizontal. Because pipe must bend gradually, entry pitch and bend limits determine this measurement.

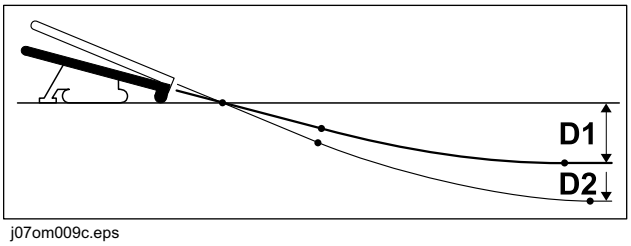

j07om009c.eps

- To reduce minimum depth (D1), reduce entry pitch. This also decreases setback.
- To increase minimum depth (D2), increase entry pitch. This also increases setback.

Bore Path Calculator

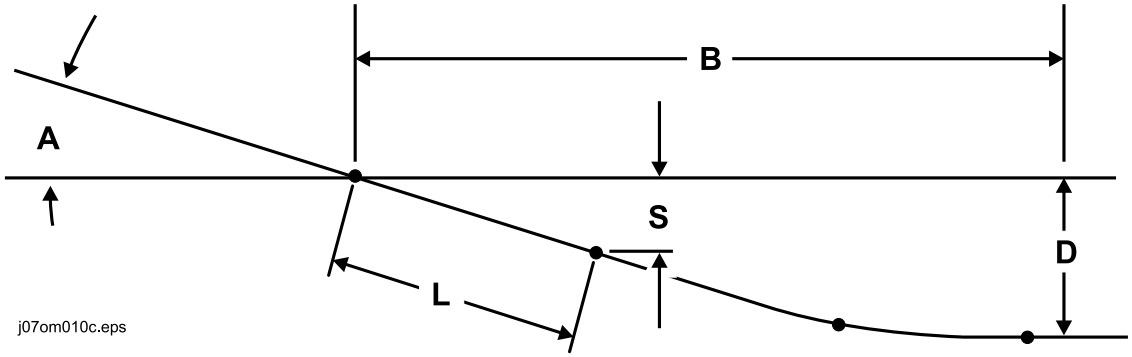

JT24 Power Pipe HD*			
Depth to Begin Steering (S)	**Entry Pitch (A)**	**Setback (B)**	**Minimum Depth (D)**
3’ 5” (1.04 m)	18% / 10.0°	29’ 5” (8.97 m)	1’ 8” (0.51 m)
4’ 2” (1.27 m)	20% / 11.3°	32’ 0” (9.75 m)	1’ 10” (0.56 m)
4’ 11” (1.50 m)	22% / 12.7°	34’ 8” (10.57 m)	2’ 1” (0.64 m)
5’ 9” (1.75 m)	25% / 14.0°	37’ 3” (11.35 m)	2’ 3” (0.69 m)
6’ 8” (2.03 m)	27% / 15.3°	39’ 10” (12.14 m)	2’ 6” (0.76 m)
7’ 7” (2.31 m)	30% / 16.7°	42’ 5” (12.93 m)	2’ 8” (0.81 m)
8’ 7” (2.62 m)	32% / 18.0°	44’ 11” (13.69 m)	2’ 11” (0.89 m)

*Numbers in table based on 117’ (35.7 m) minimum bend radius and beacon housing, EZ-Connect connector, transition sub, and one-third of first drill pipe (L, totaling 9.2’ [2.80 m]) in the ground before steering.

#600 HDX Pipe*			
Depth to Begin Steering (S)	**Entry Pitch (A)**	**Setback (B)**	**Minimum Depth (D)**
3' 7" (1.09 m)	18% / 10.0°	30' 10" (11.76 m)	1' 8" (0.51 m)
4' 4" (1.32 m)	20% / 11.3°	33' 7" (13.18 m)	1' 11" (0.58 m)
5' 2" (1.58 m)	22% / 12.7°	36' 4" (14.58 m)	2' 1" (0.64 m)
6' (1.83 m)	25% / 14.0°	39' 1" (15.95 m)	2' 4" (0.71 m)
6' 11" (2.11 m)	27% / 15.3°	41' 10" (17.32 m)	2' 7" (0.79 m)
7' 11" (2.41 m)	30% / 16.7°	44' 6" (18.69 m)	2' 9" (0.84 m)
9' (2.74 m)	32% / 18.0°	47' 3"	3' (0.91 m)

*Numbers in table based on 123' (37.5 m) minimum bend radius and beacon housing, EZ-Connect connector, transition sub, and one-third of first drill pipe (L, totaling 9.5' [2.90 m]) in the ground before steering.

Examine Pullback Material

Ask for a sample of the material you will be pulling back. Check its weight and stiffness. Contact the manufacturer for bend radius information. Check that you have appropriate pullback devices.

Prepare Entry Point

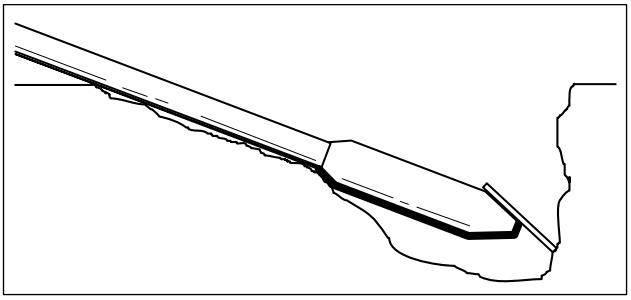
j07om011c.eps

For bore to be successful, first pipe must be straight as it enters the ground. See "Align the Joints" on page 139.

To help ensure that the first pipe does not bend, dig a small starting hole so that the first pipe is drilled into a vertical surface. Steer down as required at start. Drill head will tend to move in easiest direction (toward surface) when rotated near the surface.

To prevent bending or straining pipe, position drilling unit for straight entry.

Prepare Operator



⚠ WARNING Jobsite hazards. Exposure can cause death or serious injury. Use correct equipment and work methods. Use and maintain appropriate safety equipment.

To help avoid injury:

- Wear personal protective equipment including hard hat, safety eye wear, foot protection, hearing protection, and gloves (except when near rotating equipment).
- Remove jewelry.
- Wear close-fitting, high visibility clothing.
- Have other personal protective equipment, such as insulated boots and gloves, breathing protection, and face shield, etc. available for use depending on jobsite hazards or requirements.

Follow these guidelines before operating any jobsite equipment:

- Complete proper training and read operator's manual before using equipment.
- Plan for emergency services. Have the telephone numbers for local emergency and medical facilities on hand. Check that you will have access to a telephone.
- Review jobsite hazards, safety and emergency procedures, and individual responsibilities with all personnel before work begins. Safety videos are available from your Ditch Witch dealer or at www.ditchwitch.com/safe. Safety Data Sheets (SDS) are available at www.ditchwitch.com/support.
- Use equipment carefully. Stop operation and investigate anything that does not look or feel right.

Any time jobsite is classified as electric, drill operator and tracker operator must wear protective boots, and the drill operator must have protective gloves within reach, all meeting the following standards:

- Boots must have high tops and must be rated for the voltage on the jobsite. Tuck legs of pants completely inside boots.
- Gloves must be rated for the voltage on the jobsite.

Prepare Equipment

Check Supplies

- fuel
- keys
- marking flags or paint
- notepad and pencil
- spare fuses
- lubricants
- receiver/transmitter or tracker
- extra batteries for accessories and equipment
- beacons
- two-way radios
- quick wrench
- transition sub
- anchoring equipment and accessories
- bits, screens, and nozzles
- adapters, pipe, and beacon housings
- marking flags or paint
- water and additional hoses
- drilling fluid and additives
- backreamers, swivels, and pulling devices
- wash down hose and spray gun
- duct tape
- spray lubricant
- tool joint compound

Check Equipment

Fluid Levels

- fuel
- engine oil
- diesel exhaust fluid (DEF), if needed
- hydraulic fluid
- engine coolant

Condition and Function

- all controls

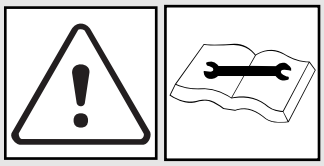

WARNING Improper control function. Use can cause death or serious injury. If control does not work as described in instructions, stop machine and have it serviced.

- battery
- hoses and valves
- pumps and motors
- tires or tracks
- signs, guards, and shields
- couplers and fittings
- water tank(s)
- fluid pump
- filters (air, oil, hydraulic)
- belts

Assemble Accessories

Console Cover

Remove pin (1), and pivot console cover (2) to back side of console as shown.

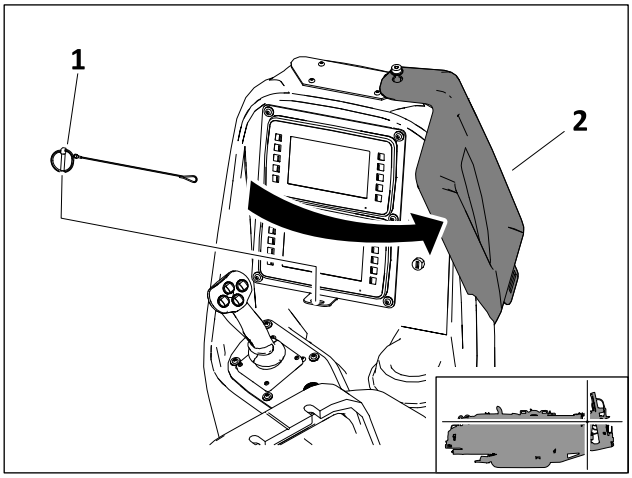

j79om072h19.eps

Fire Extinguisher

Mount a fire extinguisher near the power unit but away from possible points of ignition where shown. The fire extinguisher should always be classified for both oil and electric fires. It should meet legal and regulatory requirements.

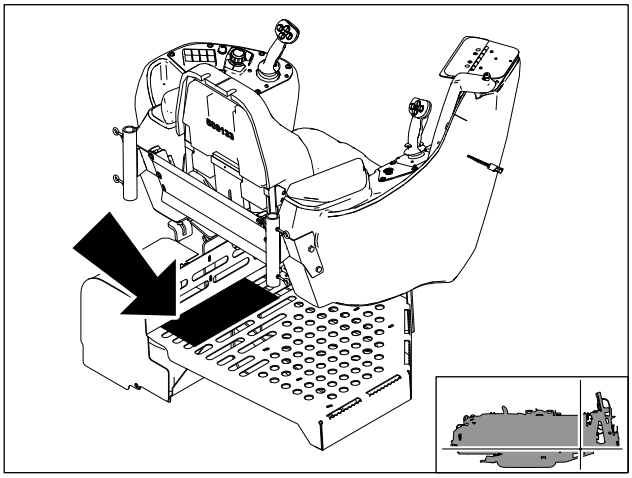
j79om067h19.eps

Umbrella

Umbrella is stored under drill frame where shown.

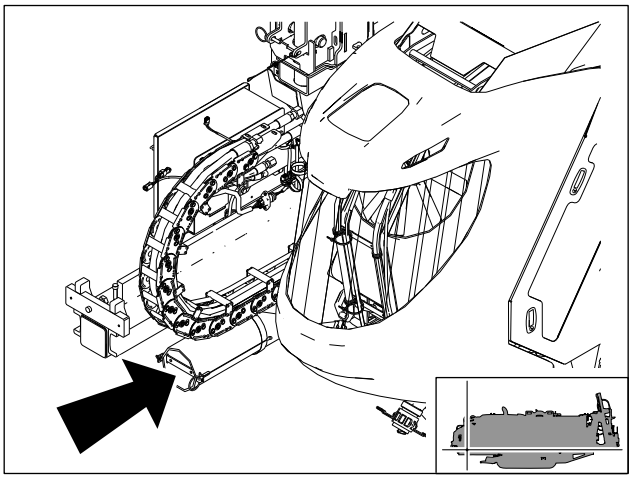
j79om068h19.eps

Controls

Chapter Contents

Alternate Control Option 42

Auxiliary Pipe Loading 46

Battery Disconnect 48

Console, Left 49

- Drilling/Operation 49
- Miscellaneous 52
- Pipe Loading 53

Console, Right 56

Console, Set-Up 59

- Controls 59
- Wireless Remote Control 61

Display, Lower 67

Display, Upper 70

- Gauges and Keys 70
- Indicators 72

Engine Compartment 85

Seat 87

Wash Wand 88

Alternate Control Option

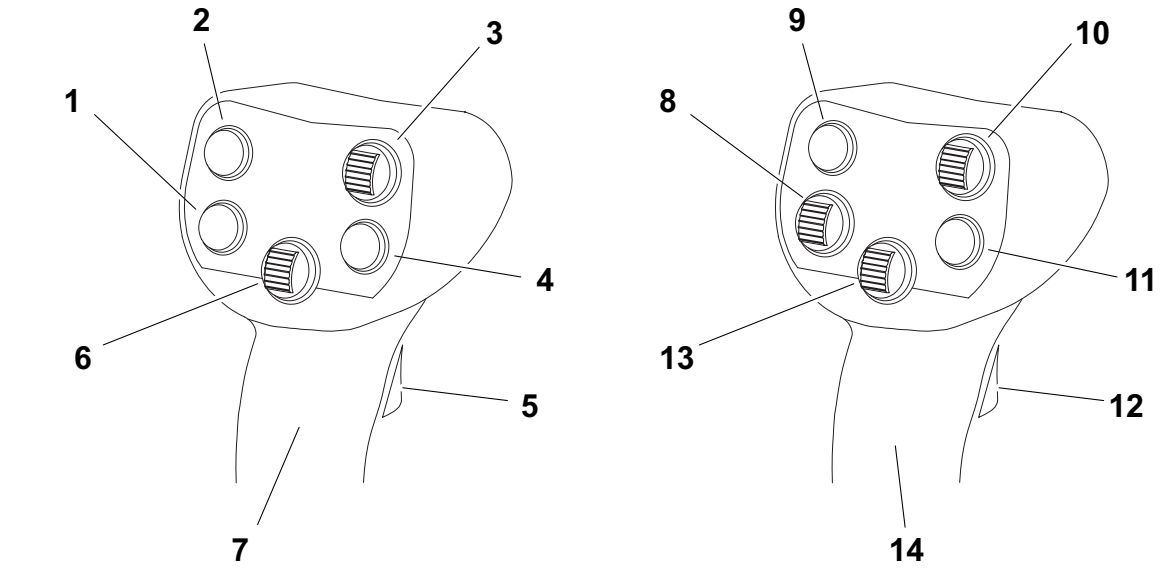

j79om001w20.eps

1. Drilling fluid quick-fill switch
2. Drilling fluid pump switch
3. Throttle control switch
4. Pipe lubricator switch
5. High-speed thrust switch
6. Set/Resume switch
7. Left joystick/Rotation control
8. Pipe gripper switch
9. Rear wrench control
10. Front wrench control
11. Extend shuttle switch
12. Retract shuttle switch
13. Pipe lift switch
14. Right joystick/Thrust control

IMPORTANT:

- Alternate controls function only with alternate control option.
- Right joystick replaces carriage control joystick with alternate control option.

Item	Description	IMPORTANT
1. Drilling fluid quick-fill switch 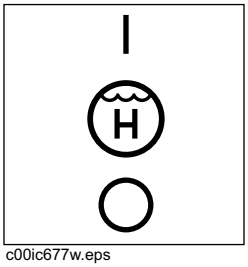 c00ic677w.eps	To fill pipe with fluid, press and hold. To return fluid to flow control setting, release.	Overrides fluid control setting for full pump flow. Also overrides temporary fluid shutdown when front wrench is clamped.
2. Drilling fluid pump switch 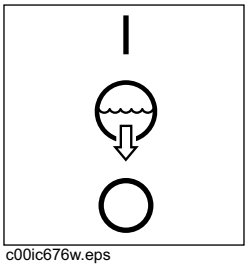 c00ic676w.eps	To turn on, press. To turn off, press again.	Use rotary operation control to control drilling fluid flow. See "Rotary operation control" on page 51. Drilling fluid pump switch and fluid flow selector must be on before using rotary operation control to control drilling fluid control. See "Fluid flow selector" on page 51.
3. Throttle control switch 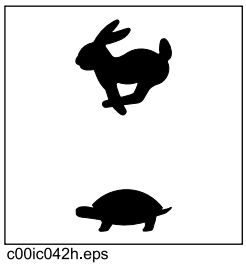 c00ic042h.eps	To increase engine speed, press top. To decrease engine speed, press bottom. To turn on autothrottle, press top.	Autothrottle mode slows engine to low throttle after 15 seconds of inactivity. To return to high speed, activate thrust, rotation, drilling fluid, or an add/remove pipe cycle.
4. Pipe lubricator switch 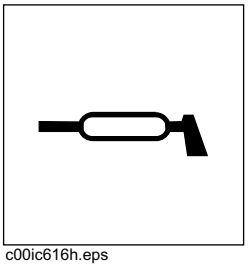 c00ic616h.eps	To apply tool joint compound, press.	

Item	Description	IMPORTANT
5. High-speed thrust switch 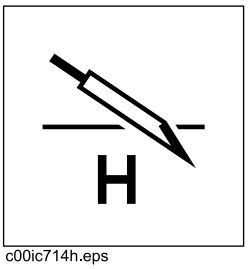 c00ic714h.eps	To thrust in high speed, press and hold. To return to regular speed, release.	
6. Set/Resume switch 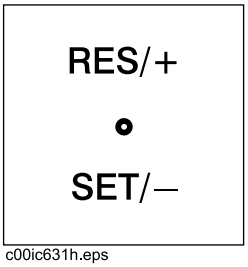 c00ic631h.eps	To resume operation or increase operation levels, press top. To set operating conditions or reduce operation levels, press bottom.	
7. Rotation control 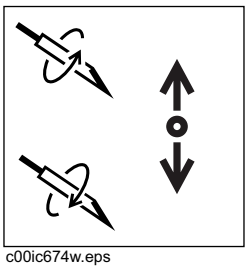 c00ic674w.eps	To rotate spindle counterclockwise (breakout), push left joystick. To rotate spindle clockwise (make up), pull right joystick.	
8. Pipe gripper switch 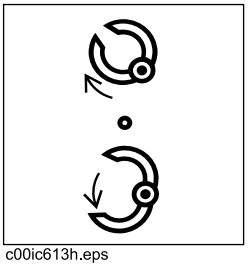 c00ic613h.eps	To close, press top. To open, press bottom.	
9. Rear wrench control 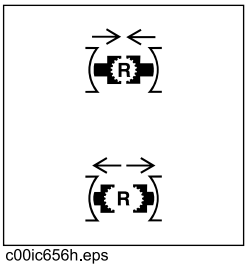 c00ic656h.eps	To clamp rear wrench, press and hold. To unclamp, release.	

Item	Description	IMPORTANT
10. Front wrench control 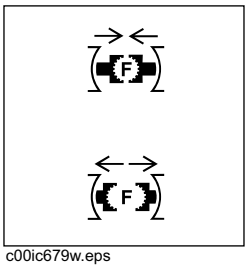 c00ic679w.eps	To clamp front wrench, press top. To unclamp front wrench, press bottom.	
11. Extend shuttle switch  c00ic680w.eps	To move shuttle toward spindle, press.	
12. Retract shuttle switch 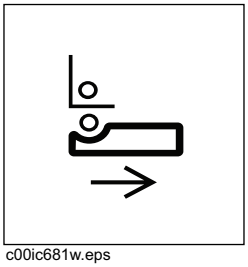 c00ic681w.eps	To move shuttle toward pipe box, press.	
13. Pipe lift switch 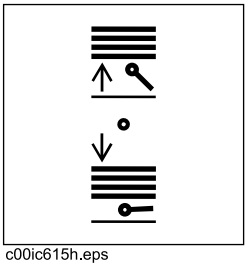 c00ic615h.eps	To raise, press top. To lower, press bottom.	
14. Thrust control 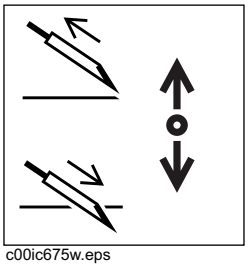 c00ic675w.eps	To move carriage forward (thrust), push right joystick. To move carriage backward (pull back), pull right joystick.	

Auxiliary Pipe Loading

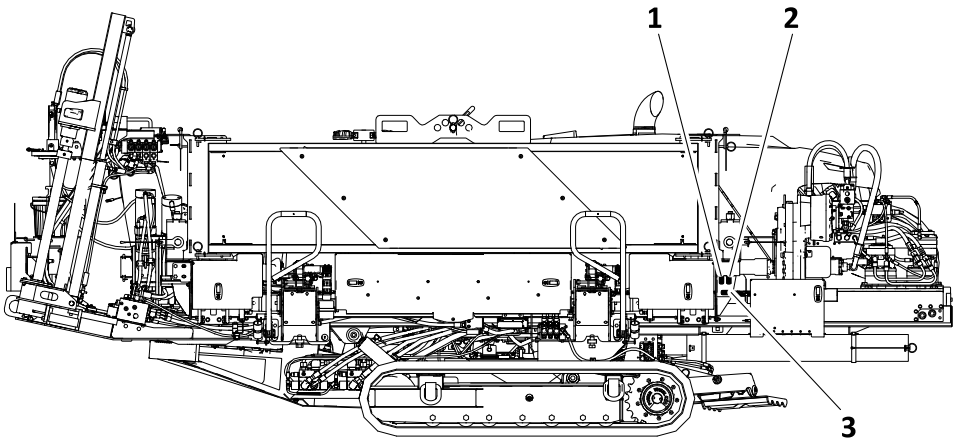

j79om004h19.eps

1. Auxiliary pipe shuttle switch
2. Auxiliary pipe lifter switch
3. Auxiliary pipe load restricted operating mode switch

IMPORTANT: See "Add/Remove Single Pipe" on page 150.

Item	Description	IMPORTANT
1. Auxiliary pipe shuttle switch 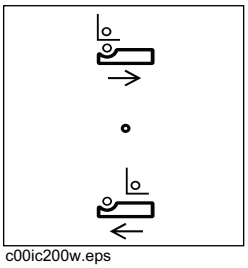 c00ic200w.eps	To move toward pipe box (retract), press top. To move toward spindle (extend), press bottom.	
2. Auxiliary pipe lifter switch 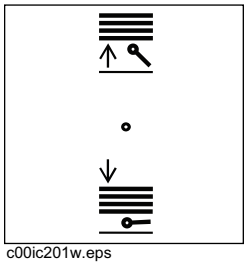 c00ic201w.eps	To raise, press top. To lower, press bottom.	

Item	Description	IMPORTANT
3. Auxiliary pipe load restricted operating mode switch 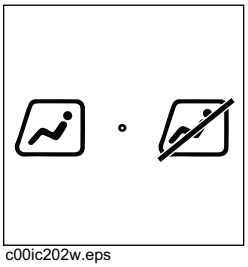 c00ic202w.eps	To override drill operator control of shuttles and lifters, press right.	

Battery Disconnect

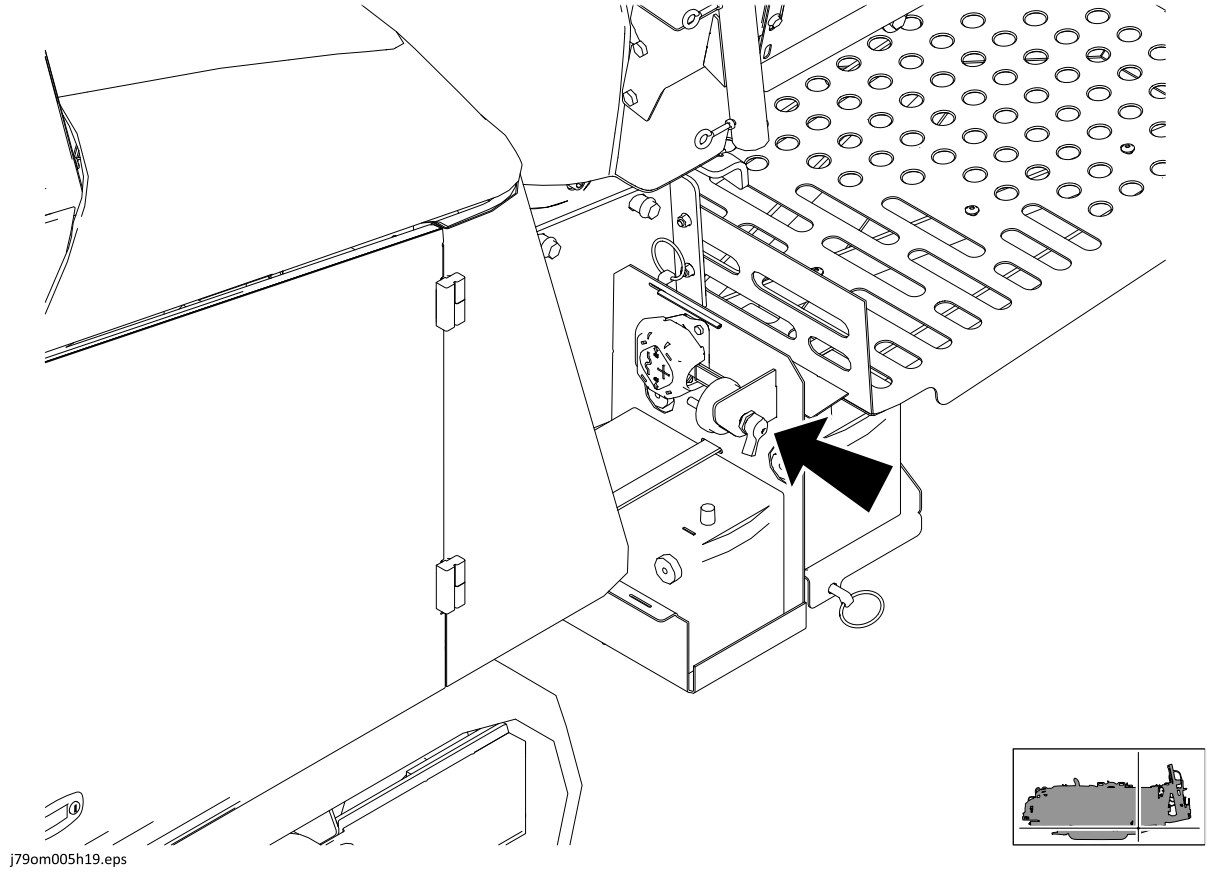
j79om005h19.eps

Item	Description	IMPORTANT
Battery disconnect 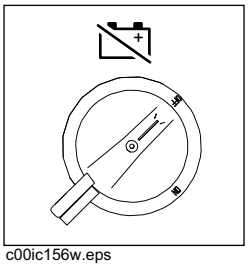 c00ic156w.eps	To connect, move right. To disconnect, move left.	***NOTICE:*** • Do not disconnect with engine running. • Wait two minutes after turning engine off before disconnecting battery.

Console, Left

Drilling/Operation

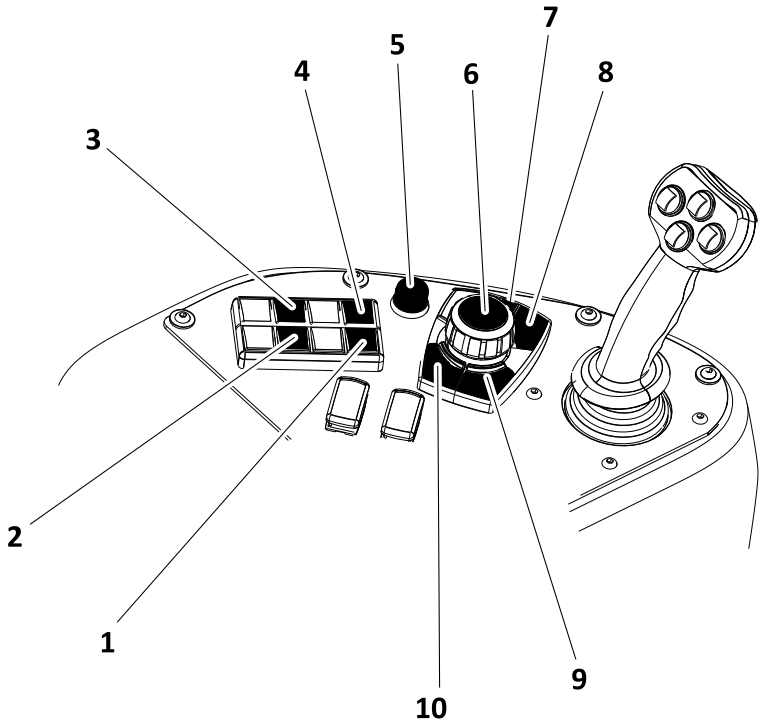

j79om069h19.eps

1. Throttle down control
2. Autocarve control
3. Two-speed rotation control
4. Autothrottle control
5. Remote engine start control
6. Rotary operation control
7. Pipe count/Thrust limit/Torque limit selector
8. Not used
9. Fluid flow selector
10. Carve window selector

Item	Description	IMPORTANT
1. Throttle down control 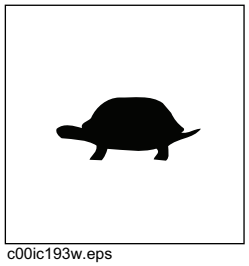 c00ic193w.eps	To decrease engine speed, press.	Engine speed will be decreased incrementally each time control is pressed.

Item	Description	IMPORTANT
2. Autocarve control 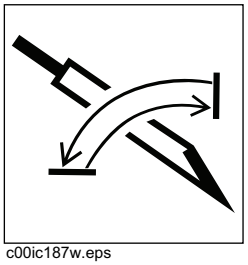 c00ic187w.eps	To enable autocarve, press. To disable, press again.	Carve window selector must be on. See "Carve window selector" on page 51. Use rotary operation control to adjust carve window. See "Rotary operation control" on page 51. Autocarve is disabled while front wrench is clamped. Two-speed carriage control and cruise control are disabled while in autocarve mode.
3. Two-speed rotation control 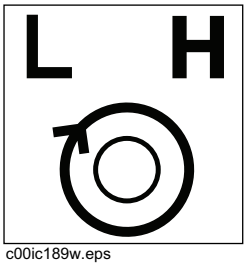 c00ic189w.eps	To rotate in high speed, press. To rotate in low speed, press again.	When using autocarve, multi-use button controls rotation speed.
4. Autothrottle control 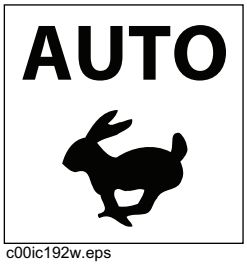 c00ic192w.eps	To turn on, press. To turn off, press again.	Autothrottle mode slows engine to low throttle after 15 seconds of inactivity. To return to high speed, activate thrust, rotation, drilling fluid, or an add/remove pipe cycle.
5. Remote engine start control 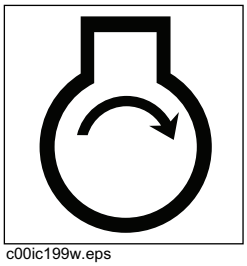 c00ic199w.eps	To start engine from operator station, press.	Works only when key in set-up console is on, operator is in seat, and battery disconnect switch is off. See "Drive" on page 89.

Item	Description	IMPORTANT
6. Rotary operation control	Turn knob to control the following functions: • fluid flow • pipe counter adjustment • carve window • thrust limit • torque limit To increase, move right. To decrease, move left.	Press and turn knob to allow finer control of functions.
7. Pipe count/Thrust limit/ Torque limit selector 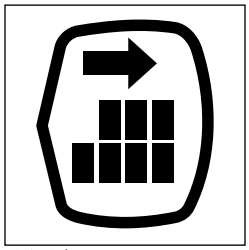 c00ic791h.eps	To move through functions, press.	Display will indicate which control is enabled. Use rotary operation control to adjust pipe count, thrust limit, or torque limit. See "Rotary operation control" on page 51.
8. Not used		
9. Fluid flow selector 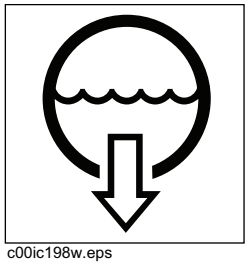 c00ic198w.eps	To enable fluid flow, press. To disable, press again.	Drilling fluid pump must be enabled. See "Drilling fluid pump switch" on page 57. Use rotary operation control to adjust fluid flow. See "Rotary operation control" on page 51.
10. Carve window selector 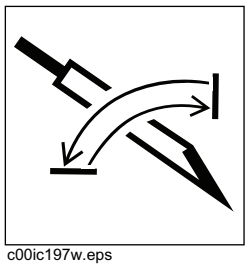 c00ic197w.eps	To enable carve window, press. To disable, press again.	Autocarve control must be on. See "Autocarve control" on page 50. Use rotary operation control to adjust carve window. See "Rotary operation control" on page 51.

Miscellaneous

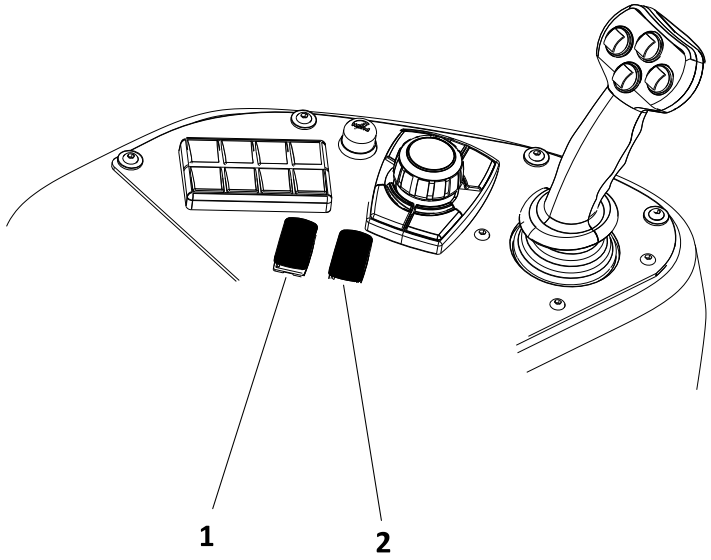

j79om007h19.eps

Item	Description	IMPORTANT
1. ESID alarm interrupt/ test switch 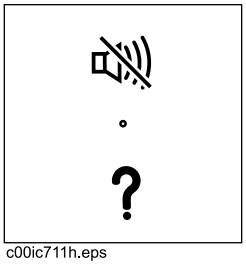 c00ic711h.eps	To turn off strike alarm at drill, press top. To start manual test, press bottom. To reset system after a strike has been detected, press bottom.	Test checks all systems and circuits except voltage limiter. See "Voltage Test" on page 149. See "If an Electric Line is Damaged" on page 17.
2. Work lights 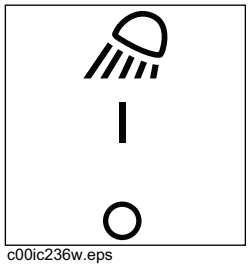 c00ic236w.eps	To turn on, press top. To turn off, press bottom.	

Pipe Loading

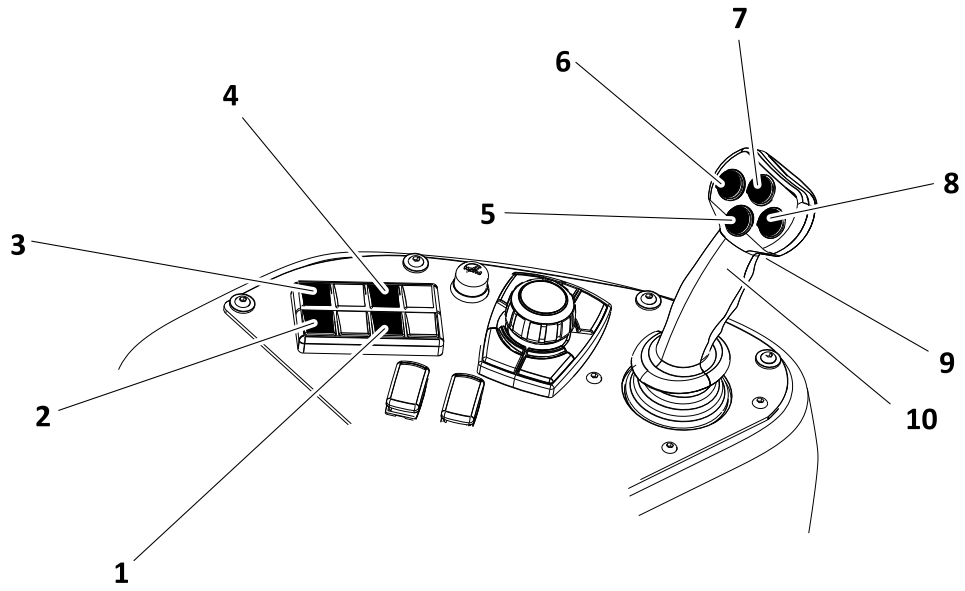

j79om008h19.eps

1. Remove pipe control
2. Select previous row control
3. Select next row control
4. Add pipe control
5. Set/Resume switch
6. Pipe gripper switch
7. Pipe shuttle switch
8. Pipe lift switch
9. Pipe lubricator switch
10. Wrench control

Item	Description	IMPORTANT
1. Remove pipe control 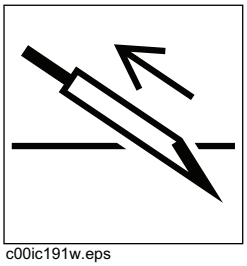 c00ic191w.eps	To enable automated remove pipe function, press. To enable manual pipe loader controls, press again.	See "Use Automated Pipe Loader System" on page 111.

Item	Description	IMPORTANT
2. Select previous row control 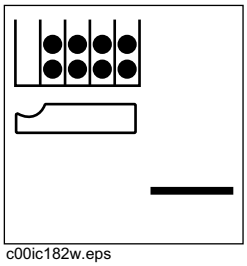 c00ic182w.eps	To move shuttle to previous row in pipe box, press.	See "Row Select" on page 155.
3. Select next row control 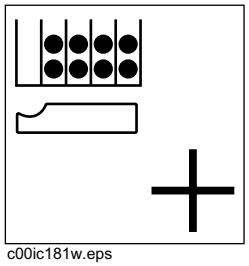 c00ic181w.eps	To move shuttle to next row in pipe box, press.	See "Row Select" on page 155.
4. Add pipe control 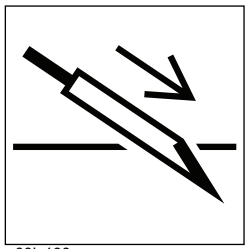 c00ic190w.eps	To enable automated add pipe function, press. To enable manual pipe loader controls, press again.	See "Use Automated Pipe Loader System" on page 111.
5. Set/Resume switch 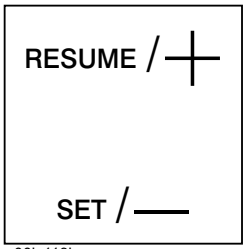 c00ic113h.eps	To resume operation or increase operation levels, press top. To set operating conditions or reduce operation levels, press bottom.	See "Cruise Control Not all machines" on page 128. See "Use Autocarve Mode" on page 115. See "Pipe Loader" on page 150.
6. Pipe gripper switch 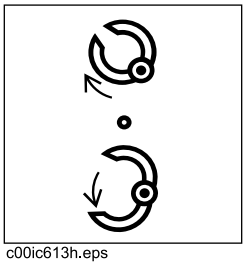 c00ic613h.eps	To close, press top. To open, press bottom.	

Item	Description	IMPORTANT
7. Pipe shuttle switch 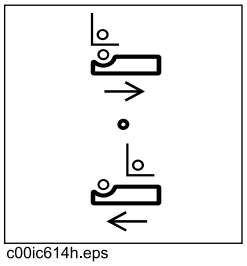 c00ic614h.eps	To move toward pipe box (retract), press top. To move toward spindle (extend), press bottom.	
8. Pipe lift switch 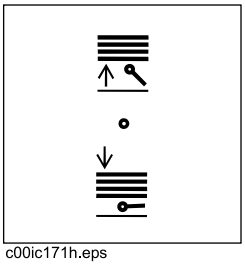 c00ic171h.eps	To raise, press top. To lower, press bottom.	
9. Pipe lubricator switch 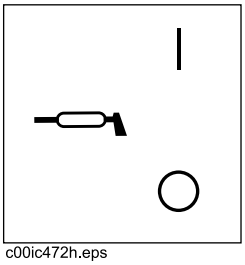 c00ic472h.eps	To apply tool joint compound, press.	
10. Wrench control 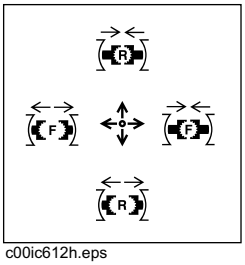 c00ic612h.eps	To clamp and rotate rear wrench, push forward. To unclamp rear wrench, pull back. To clamp front wrench, move right. To unclamp front wrench, move left.	

Console, Right

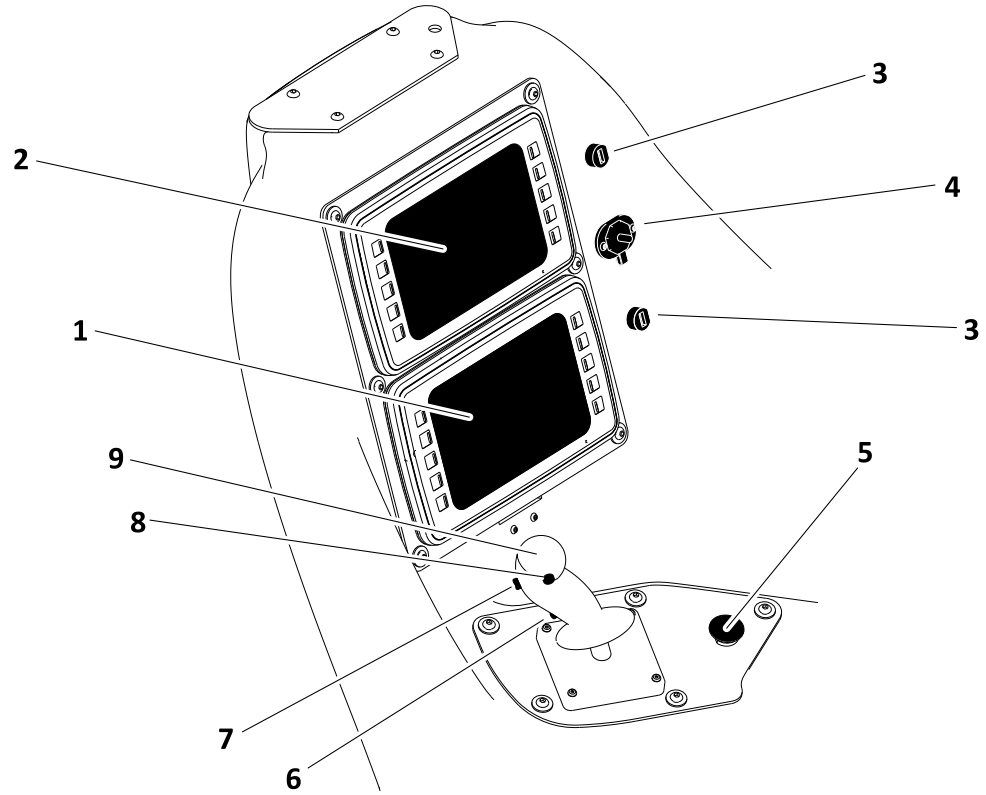

j79om009h19.eps

1. Lower/Remote* display
2. Upper display
3. USB port
4. Auxiliary outlet
5. Remote engine stop switch
6. Drilling fluid pump switch
7. Multi-use button
8. Drilling fluid quick-fill switch
9. Carriage control joystick

*If equipped

Item	Description	IMPORTANT
1. Lower/Remote display	Displays graphic symbols for indicators and conditions.	See "Display, Lower" on page 67. If using a Subsite Electronics tracking system, information from the tracker is also displayed. See tracking system operator's manual for more information.
2. Upper display	Displays graphic symbols for indicators and conditions.	See "Display, Upper" on page 70.

Item	Description	IMPORTANT
3. USB port	Provides power for mobile devices.	DC5V, 1 A (5 W)
4. Auxiliary outlet 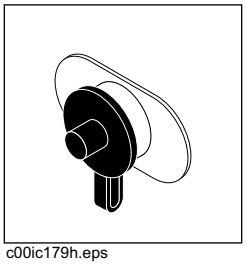 c00ic179h.eps	Provides power for other equipment.	12VDC, 5 A
5. Remote engine stop switch 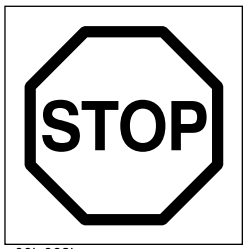 c00ic062h.eps	To stop engine, press.	If used to stop machine, ensure ignition switch is in the off position. If wrenches are clamped when remote engine stop is pressed, wrenches could gradually unclamp.
6. Drilling fluid pump switch 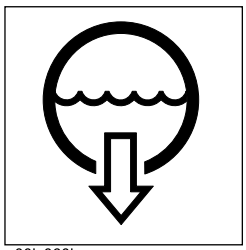 c00ic060h.eps	To turn on, press. To turn off, press again.	Drilling fluid pump switch and fluid flow selector must be enabled. See "Fluid flow selector" on page 51. Use rotary operation control to control drilling fluid flow. See "Rotary operation control" on page 51.
7. Multi-use button	To engage a function, press and hold. To return to normal operation, release.	Operation options: • two-speed carriage control • autocarve reaming and positioning functions • interrupted makeup system override

Item	Description	IMPORTANT
8. Drilling fluid quick-fill switch 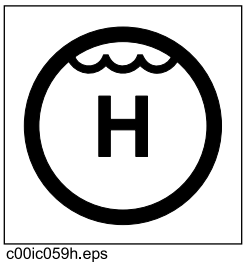 c00ic059h.eps	To fill pipe with fluid, press and hold. To return fluid flow to flow control setting, release.	Overrides fluid control setting for full pump flow. Also overrides temporary fluid shutdown when front wrench is clamped.
9. Carriage control joystick 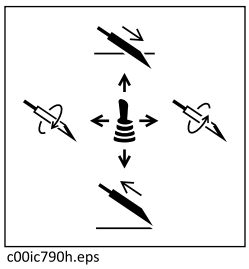 c00ic790h.eps	To move carriage forward (thrust), push. To move carriage backward (pull back), pull. To rotate spindle counterclockwise (break out), move right. To rotate spindle clockwise (make up), move left.	See "Operate Carriage Control" on page 105.

Console, Set-Up

Controls

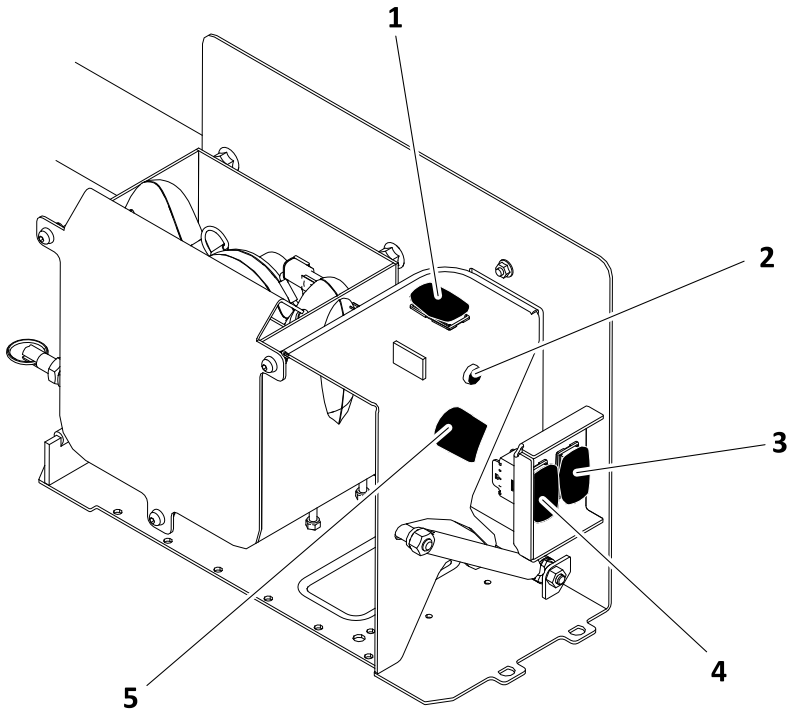

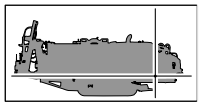

j79om010h19.eps

1. Engine shutdown override switch
2. Cold start wait indicator
3. Right track switch
4. Left track switch
5. Ignition switch

Item	Description	IMPORTANT
1. Engine shutdown override switch 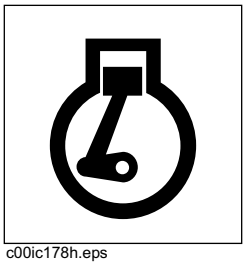 c00ic178h.eps	If engine shutdown indicator lights, press to delay engine shutdown for 30 seconds.	***NOTICE:*** After 30 seconds, engine will shut down unless fault condition has been corrected. See "Electronic Controlled Engine Overview" on page 131.

Item	Description	IMPORTANT
2. Cold start wait indicator 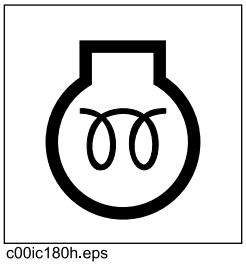 c00ic180h.eps	Lights when intake air-preheater is operating.	See "Start" on page 90.
3. Right track switch 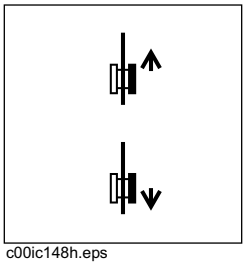 c00ic148h.eps	To move right track forward, press top. To move in reverse, press bottom.	Use only if wireless control is inoperable.
4. Left track switch 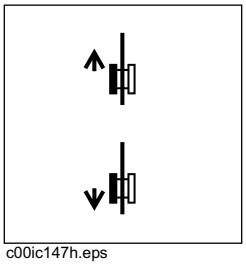 c00ic147h.eps	To move left track forward, press top. To move in reverse, press bottom.	Use only if wireless control is inoperable.
5. Ignition switch 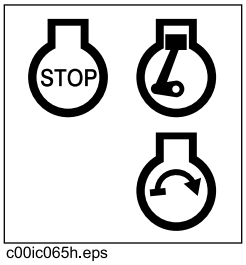 c00ic065h.eps	To activate accessories, turn right. To start engine, turn right and hold. To shut off machine, turn left.	Wrenches can unclamp after machine is shut off. Wrenches will clamp when engine is started. See "Drive" on page 89.

Wireless Remote Control

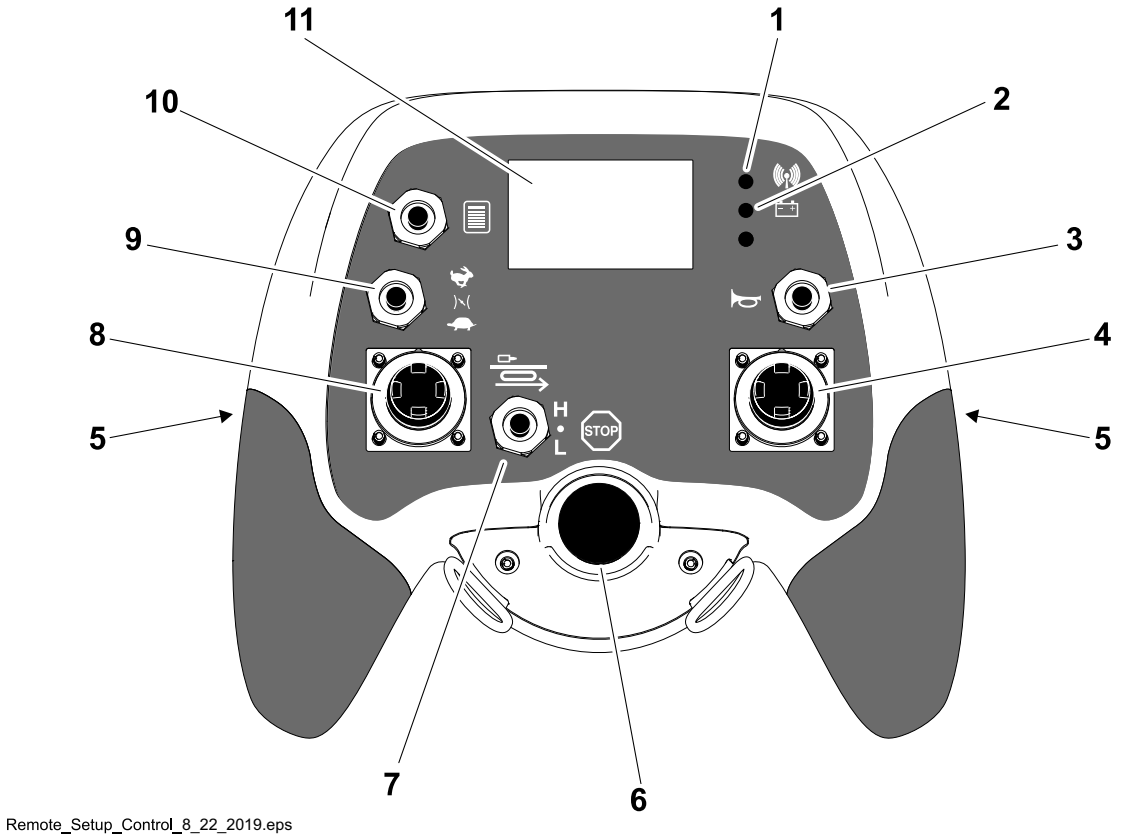

IMPORTANT: Operator station must be empty to operate wireless remote control.

1. Communication link indicator
2. Power status indicator
3. Power/Enable/Horn switch
4. Right multifunction joystick
5. Operator presence switch
6. Engine stop
7. Drive mode switch
8. Left multifunction joystick
9. Throttle switch
10. Ground drive mode select switch
11. LCD display

Item	Description	IMPORTANT
1. Communication link indicator 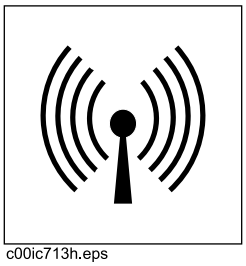 c00ic713h.eps	Indicates status of communication link between wireless remote control and machine.	An active communication link is required to operate wireless remote control. • Flashing yellow indicates no communication link. • Flashing green indicates good communication link. • Steady red indicates an internal problem. Contact your Ditch Witch dealer.
2. Power status indicator 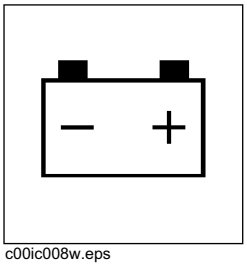 c00ic008w.eps	Indicates battery status and cable connection.	Off indicates good battery level. Flashing red indicates low battery level. Solid green indicates transmitter is connected to and powered by machine.
3. Power/Enable/Horn switch 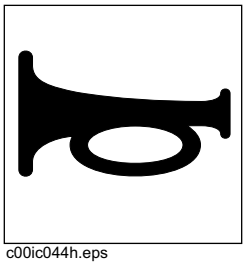 c00ic044h.eps	To turn power on, move up and hold until communication link indicator lights yellow and then flashes green. To start operation, move up and hold until horn sounds. To use horn, move up. To turn power off, move down until indicator turns off.	Wireless remote control indicator (page 4) will light. Ensure left and right multifunction joysticks are in neutral position. Must be moved up after changing modes to enable new function. See "Ground drive mode select switch" on page 63. Wireless remote control turns off and communication link indicator flashes after one minute of inactivity. Move up twice to restart. See "Drive" on page 89.
4. Right multifunction joystick	To control selected system, move.	See "Multifunction Joystick Control Modes" on page 64.

Item	Description	IMPORTANT
5. Operator presence switch 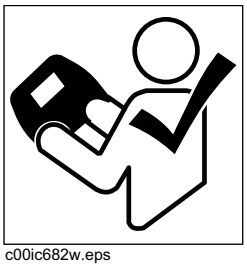 c00ic682w.eps	To operate wireless remote control, press one or both switches.	Must be released and pressed again after changing modes to enable new function. See "Ground drive mode select switch" on page 63.
6. Engine stop 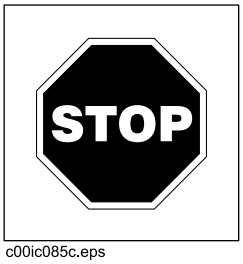 c00ic085c.eps	To stop engine, press.	To restart engine, turn ignition switch off and then back on.
7. Drive mode switch 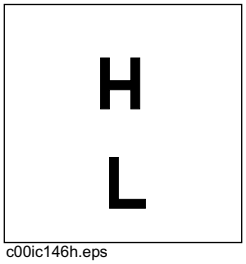 c00ic146h.eps	To select normal driving mode (high), move up. To select transport mode (low), move down.	Use transport mode when loading and unloading machine.
8. Left multifunction joystick	To control selected system, move.	See "Multifunction Joystick Control Modes" on page 64.
9. Throttle switch 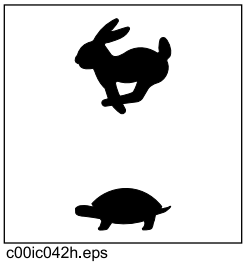 c00ic042h.eps	To increase engine speed, move up. To decrease, move down.	
10. Ground drive mode select switch	To move up through modes, move up. To move down through modes, move down.	Enable switch must be pressed after changing modes to enable new function.

Item	Description	IMPORTANT
11. LCD display	Displays selected mode of operation.	

Multifunction Joystick Control Modes

The multifunction joystick controls can be used to control multiple systems by selecting various modes.

IMPORTANT: To switch between modes, see "Ground drive mode select switch" on page 61.

Left Multifunction Joystick Modes

Item	Description	IMPORTANT
Dual joystick ground drive control 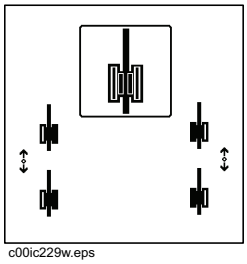 c00ic229w.eps	To move right track forward, move up. To move in reverse, move down.	Operator presence switch(es) must be pressed and operator seat must be empty for control to work. See "Steer" on page 91.
Left stabilizer control 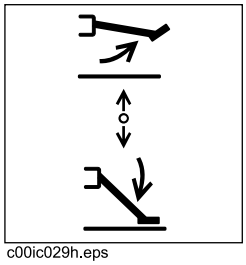 c00ic029h.eps	To raise, move up. To lower, move down.	Lower left and right stabilizers to the ground together, then adjust individually.
Dual joystick left anchor lift control 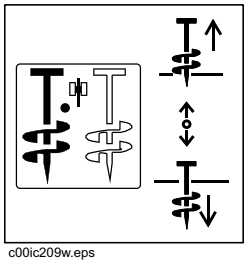 c00ic209w.eps	To raise, move down. To lower, move up.	

Item	Description	IMPORTANT
Dual joystick right anchor lift control 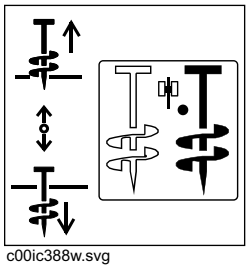 c00ic388w.svg	To raise, move down. To lower, move up.	

Right Multifunction Joystick Modes

Item	Description	IMPORTANT
Single joystick ground drive control 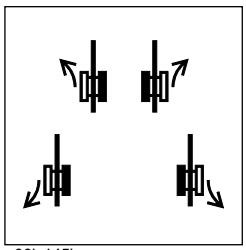 c00ic145h.eps	To move tracks forward, move up. To move in reverse, move down. To steer, move left or right.	Operator presence switch(es) must be pressed and operator seat must be empty for control to work. See "Steer" on page 91.
Right stabilizer control 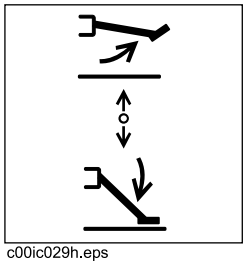 c00ic029h.eps	To raise, move up. To lower, move down.	Lower left and right stabilizers to the ground together, then adjust individually.
Frame tilt control 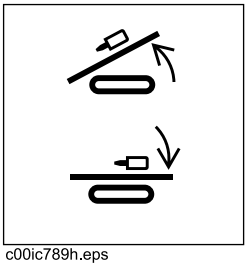 c00ic789h.eps	To raise, pull. To lower, push.	

Item	Description	IMPORTANT
Dual joystick left anchor rotation control 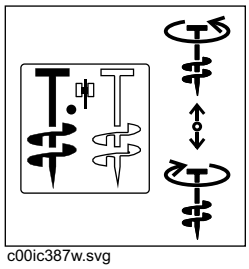 c00ic387w.svg	To drive, move up. To remove, move down.	
Dual joystick right anchor rotation control 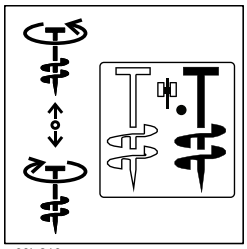 c00ic210w.eps	To drive, move up. To remove, move down.	
Dual joystick ground drive control 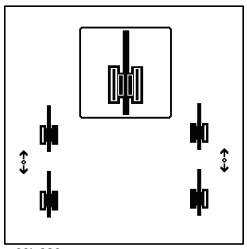 c00ic229w.eps	To move right track forward, move up. To move in reverse, move down.	Operator presence switch(es) must be pressed and operator seat must be empty for control to work. See "Steer" on page 91.

Display, Lower

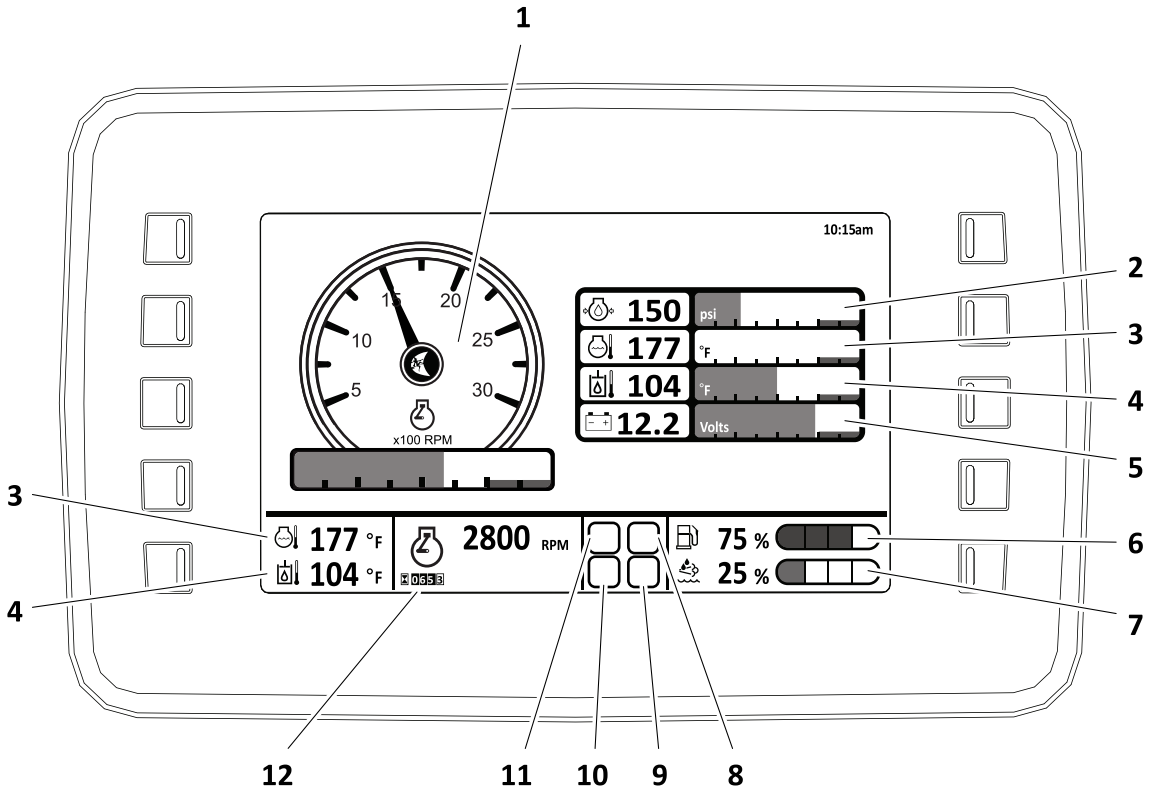

j79om070h19.eps

IMPORTANT: If machine is equipped with Subsite COMMANDER™ 7 display, engine information will be displayed on screen in addition to tracker information. See tracker operator's manual.

1. Tachometer
2. Engine oil pressure gauge
3. Engine coolant temperature gauge
4. Hydraulic fluid temperature gauge
5. Voltmeter gauge
6. Fuel gauge
7. Diesel exhaust fluid gauge
8. Exhaust cleaning indicator
9. High exhaust temperature indicator
10. Hydraulic fluid filter/temperature indicator
11. Engine warning/stop indicator
12. Hourmeter

Item	Description	IMPORTANT
1. Tachometer	Displays engine speed.	
2. Engine oil pressure gauge	 Displays engine oil pressure.	Full load reading should be 60-80psi (4.1-5.5bar).
3. Engine coolant temperature gauge	 Displays engine coolant temperature.	Normal coolant temperature is 160°-225°F (71°-107°C).
4. Hydraulic fluid temperature gauge	 Displays hydraulic fluid temperature.	Normal hydraulic fluid temperature is less than 155°F (68°C).
5. Voltmeter gauge	 Displays system voltage.	Normal voltage is 13-14V with engine running.
6. Fuel gauge	 Displays level of fuel.	Icon flashes yellow when fuel level reaches 10%. See "Approved Fuel" on page 171.
7. Diesel exhaust fluid gauge	 Displays level of diesel exhaust fluid.	Icon flashes yellow every half second if level is lower than 10% but higher than 2.5%. Icon flashes yellow every one second if level is less than 2.5%. Icon flashes yellow every two seconds if quality of diesel exhaust fluid is poor. See "Diesel Exhaust Fluid (DEF)" on page 172.
8. Exhaust cleaning indicator	 Lights when exhaust cleaning is needed.  Lights when operator has disabled exhaust cleaning.	See "Exhaust Cleaning" on page 173.
9. High exhaust temperature indicator	 Lights when exhaust temperature is high.	***NOTICE:*** May light during exhaust cleaning.

Item	Description	IMPORTANT
10. Hydraulic fluid filter/ temperature indicator	 Lights when hydraulic filter is restricted.  Lights when hydraulic fluid temperature is too high.	
11. Engine warning/stop indicator	 Lights when engine needs attention.  Lights when operator needs to stop engine.	
12. Hourmeter	Displays engine operating time.	Use these times to schedule service.

Display, Upper

Gauges and Keys

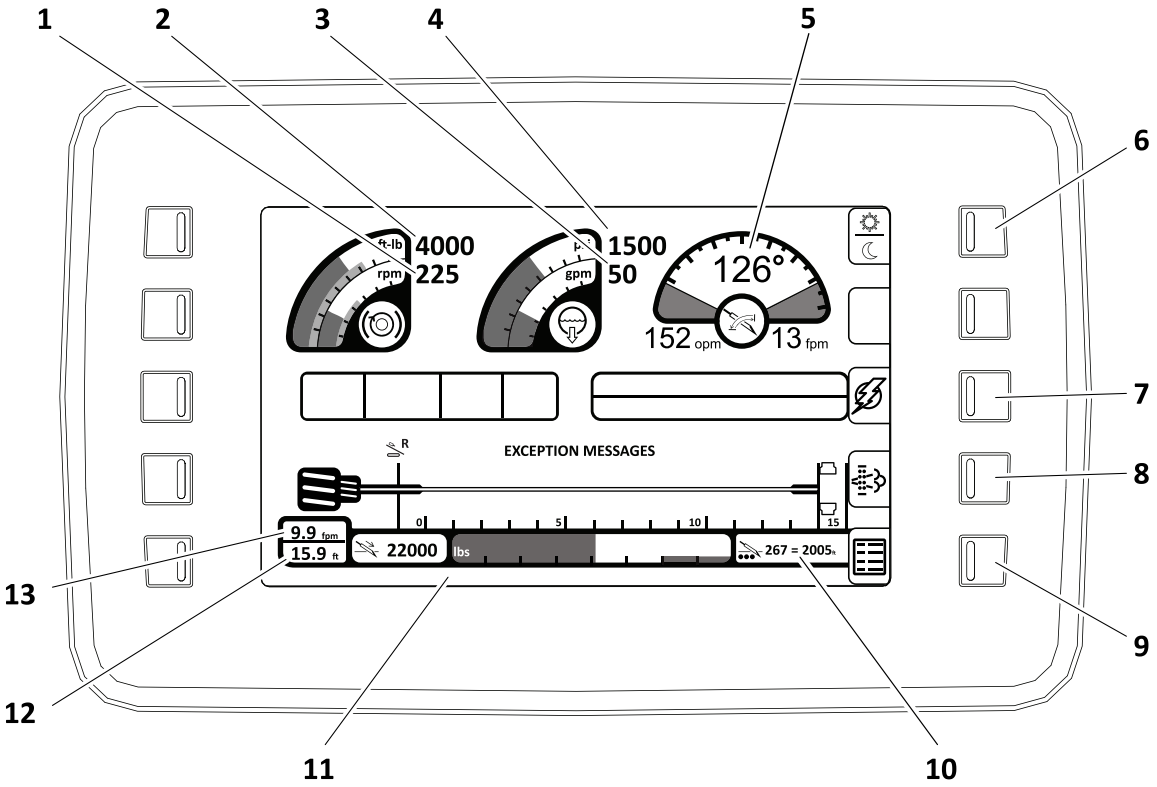

j79om065h19.eps

IMPORTANT: Press any key to activate menu options.

1. Rotation speed gauge
2. Rotation pressure gauge
3. Drilling fluid flow gauge
4. Drilling fluid pressure gauge
5. Carve window
6. Day/Night mode key
7. ESID status display key
8. Parked exhaust cleaning key
9. Main menu key
10. Pipe counter
11. Thrust pressure gauge
12. Carriage distance
13. Carriage speed

Item	Description	IMPORTANT
1. Rotation speed gauge	Displays rotation speed.	
2. Rotation pressure gauge	Displays rotation pressure.	Can be adjusted to display rotation force in user settings.
3. Drilling fluid flow gauge	Displays drilling fluid speed.	
4. Drilling fluid pressure gauge	Displays drilling fluid pressure.	
5. Carve window	Displays carve window set by the operator.	See "Use Autocarve Mode" on page 115.
6. Day/Night mode key	 To toggle between day and night modes, press.	
7. ESID status menu key	 To select ESID status menu, press.	See "ESID Status Menu" on page 77.
8. Parked exhaust cleaning key	 To start parked exhaust cleaning, press.	***NOTICE:*** • Failure to complete an exhaust cleaning when required can cause engine damage. • Ensure machine is away from combustible material and engine is set at low throttle before initiating exhaust cleaning. • A pop-up message will appear when exhaust cleaning is selected. Follow on-screen prompts to complete the process.
9. Main menu key	 To select main menu, press.	See "Main Menu" on page 75.
10. Pipe counter	Displays number of pipe and distance drilled on current bore.	
11. Thrust pressure gauge	Displays thrust pressure.	Can be adjusted to display thrust force in user settings.
12. Carriage distance	Displays distance of carriage.	
13. Carriage speed	Displays speed of carriage.	

Indicators

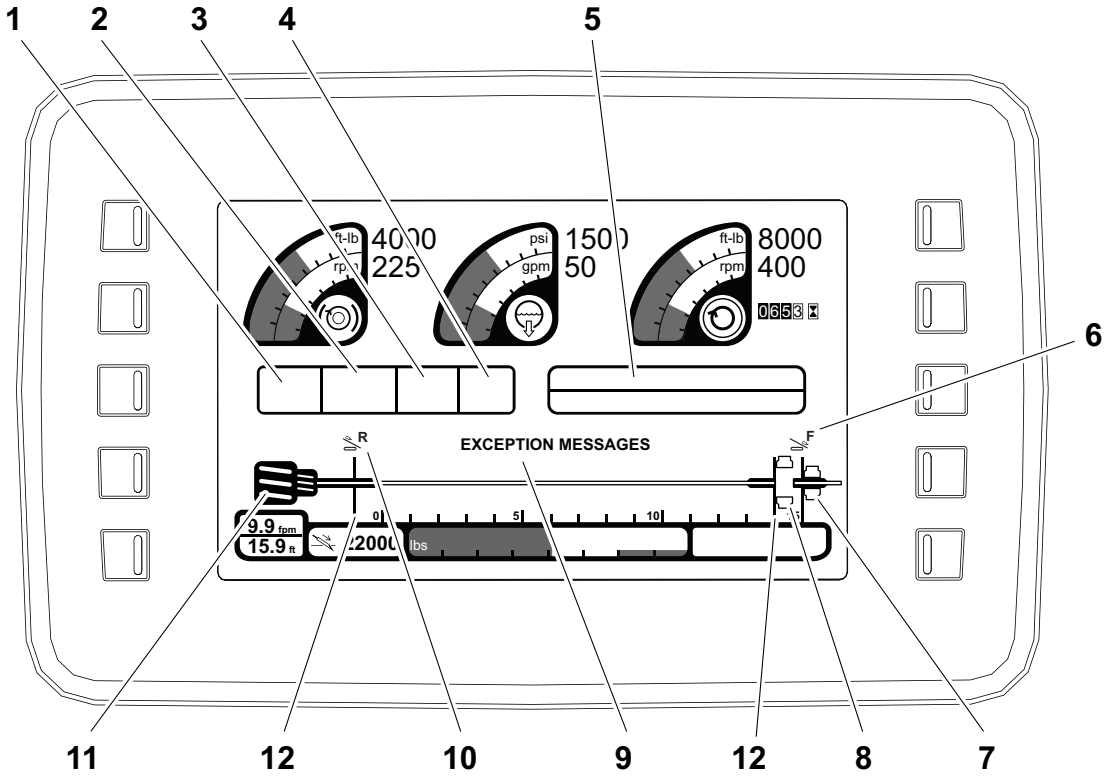

j59om063w.eps

1. ESID status indicator
2. Pipe row indicator
3. Drill indicator
4. Cruise mode indicator
5. Operation messages
6. Front home/stop indicator
7. Front wrench indicator
8. Rear wrench indicator
9. Exception messages
10. Rear home/stop indicator
11. Carriage indicator
12. Tool joint position

Item	Description	IMPORTANT
1. ESID status indicator	 ESID OK  ESID voltage  ESID detected, not OK  ESID not detected  ESID current indicator	Green background Red background Yellow background Red background Red background
2. Pipe row indicator	 Indicates current row of pipe selected.	
3. Drill indicator	 Indicates when drill mode is enabled.	Lights when operator is in seat.
4. Cruise mode indicator	 Indicates when cruise mode is enabled.	
5. Operation messages	Displays messages for overall operation of machine.	
6. Front home/stop indicator	 Indicates when carriage has reached front home/stop position.	Yellow background indicates carriage is approaching front home position. Green background indicates carriage has reached front home position. Red background indicates carriage is in front stop position.
7. Front wrench indicator	 Wrenches clamped  Wrenches unclamped	
8. Rear wrench indicator	 Wrenches clamped  Wrenches unclamped	
9. Exception messages	Displays any cautionary or warning messages.	

Item	Description	IMPORTANT
10. Rear home/stop indicator	 Indicates when carriage has reached rear home/stop indicator.	Yellow background indicates carriage is approaching rear home position. Green background indicates carriage has reached rear home position. Red background indicates carriage is in rear stop position.
11. Carriage indicator	Animated display of the movement of carriage and pipe.	
12. Tool joint position	Displays current position of SaverLok and pipe tool joints.	

Main Menu

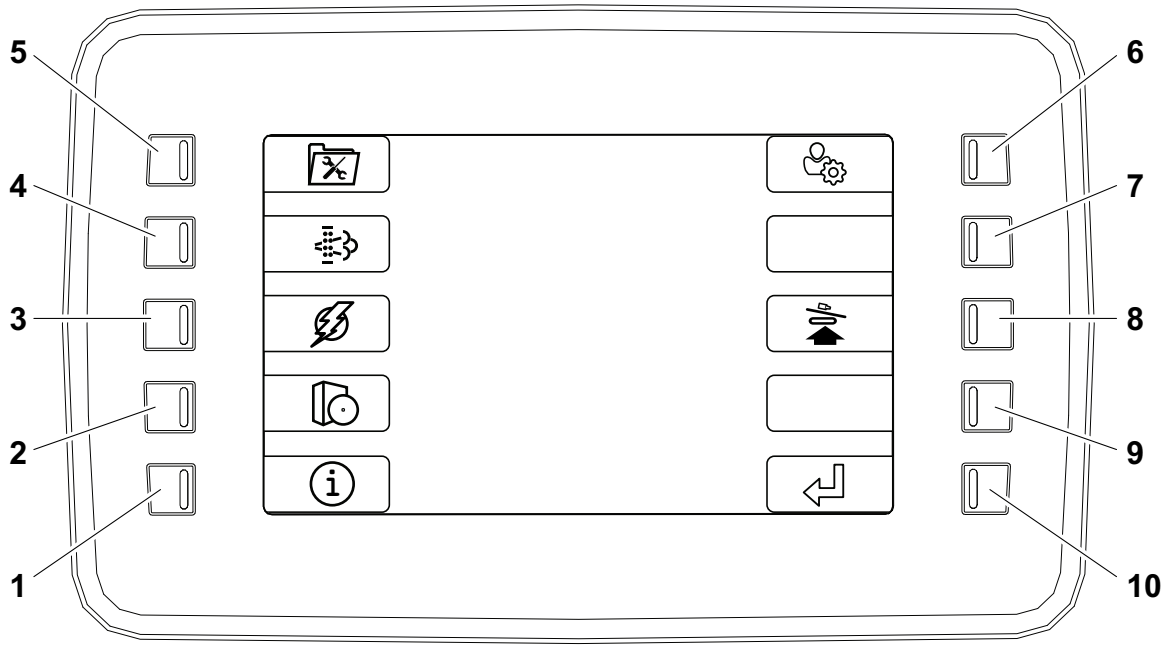

j59om067w.eps

IMPORTANT: Key functions change with each menu screen and are displayed next to the key.

1. Information menu key
2. System settings key
3. ESID history menu key
4. Exhaust cleaning disable key
5. Engine diagnostics key
6. User settings key
7. Not used
8. Drill set-up menu key
9. Not used
10. Return key

Item	Description	IMPORTANT
1. Information menu key	To display information about raw values and rotation hours, press.	
2. System settings key	To display software version information, press.	

Item	Description	IMPORTANT
3. ESID history menu key	 To display past ESID codes, if any, press.	
4. Exhaust cleaning disable key	 To disable exhaust cleaning, press.	***NOTICE:*** Failure to complete an exhaust cleaning when required can cause engine damage. See "Exhaust Cleaning" on page 173.
5. Engine diagnostics key	 To display engine diagnostic codes, if any, press.	If diagnostic codes are displayed, contact your Ditch Witch dealer.
6. User settings key	 To access menu used to customize user settings, press.	Brightness, language, real time clock, and units of measurement can be adjusted in this screen.
7. Not used		
8. Drill set-up menu key	 To access menu used to adjust, anchors, stabilizers, and frame tilt using carriage control joystick, press.	See "Drill Set-Up Menu" on page 82. All drill set-up functions are also possible using the remote control. See "Wireless Remote Control" on page 61.
9. Not used		
10. Return key	 To return to main screen, press.	

ESID Status Menu

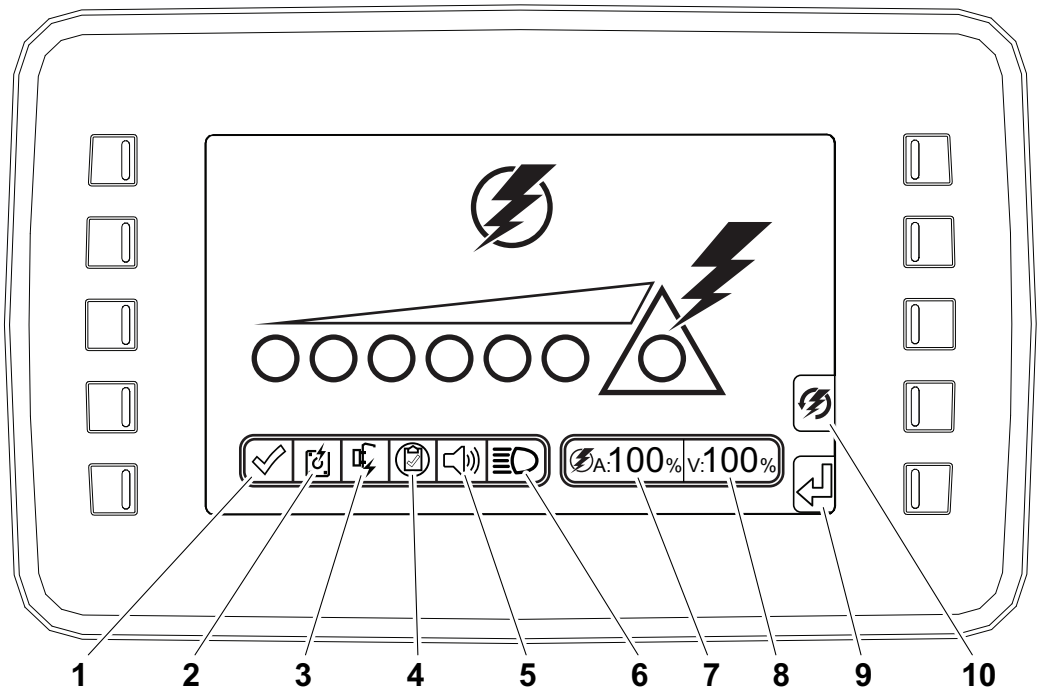

j59om073w.eps

1. OK (check) indicator
2. Amperage indicator
3. Voltage indicator
4. Test indicator
5. Horn indicator
6. Strobe indicator
7. Coil strike percentage
8. Volt strike percentage
9. Return key
10. History menu key

Item	Description	IMPORTANT
1. OK (check) indicator	✔ Lights when ESID manual test reports no problems.	
2. Amperage indicator	Lights when ESID has detected a non-specific problem with current coil.	

Item	Description	IMPORTANT
3. Voltage indicator	 Lights when ESID has detected a non-specific problem with voltage limiter circuit.	
4. Test indicator	 Lights when manual test is being conducted.	
5. Horn indicator	 Lights when ESID horn is active.	
6. Strobe indicator	 Lights when ESID strobe is active.	
7. Coil strike percentage	See "Electric Strike System" on page 145.	
8. Volt strike percentage	See "Electric Strike System" on page 145.	
9. Return key	 To return to main screen, press.	
10. History menu key	 To display past ESID codes, if any, press.	

ESID Strike Display

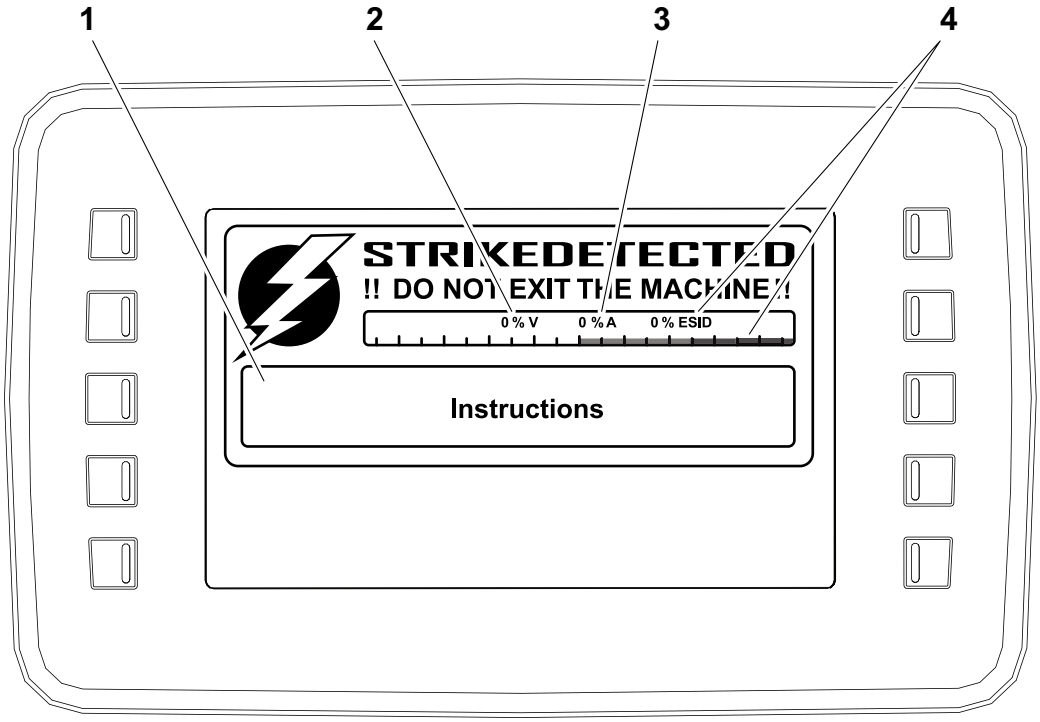

j59om071w.eps

IMPORTANT:

- The above screen is displayed when an electrical strike is detected. See "Electric Strike System" on page 145.
- The ESID does not indicate proximity to electrical lines. System will activate only when voltage and/or amperage detected at the machine is above minimum limits.

1. Instruction messages
2. Voltage indicator
3. Current indicator
4. Strike condition indicator

Item	Description	IMPORTANT
1. Instruction messages	Follow on-screen instruction messages when a strike is detected.	
2. Voltage indicator	Indicates percentage of voltage difference detected between voltage limiter and unit.	30V will display as 100%.

Item	Description	IMPORTANT
3. Current indicator	Indicates percentage of current detected at current transformer.	300mA will display as 100%.
4. Strike condition indicator	Indicates the total combined percentage of detected voltage and current and displays it graphically.	An alarm condition occurs when total combined percentage is equal to or greater than 100%.

Diagnostic Messages

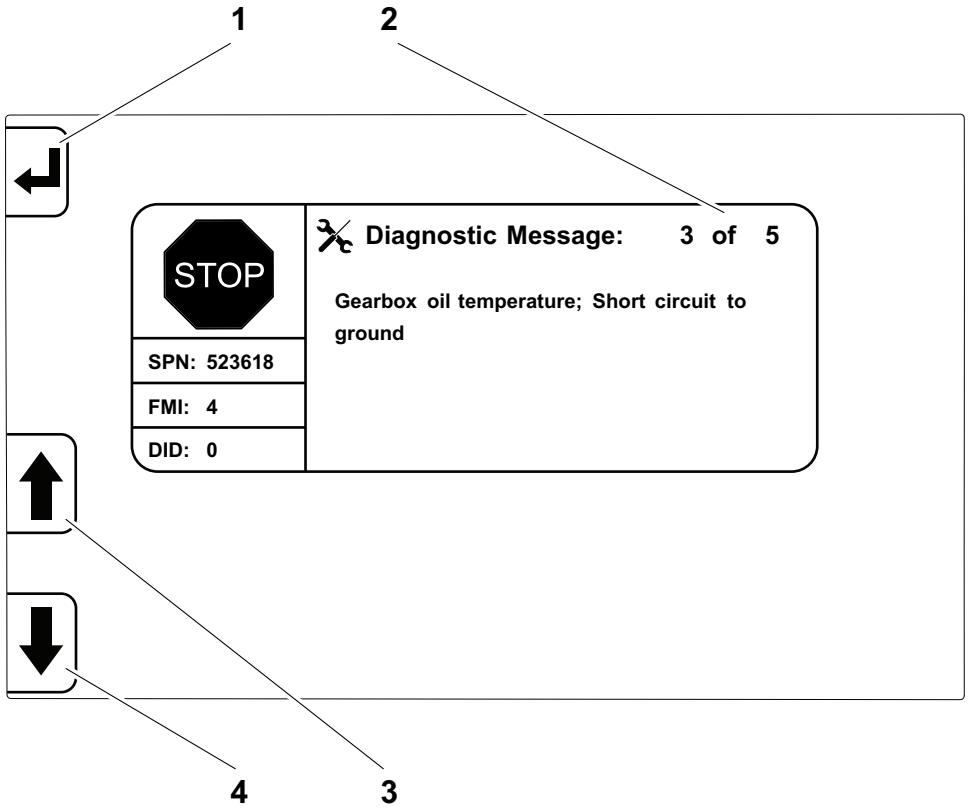

j59om075w.eps

Item	Description	IMPORTANT
1. Hide/Recall key	To hide/recall active messages, press.	
2. Diagnostic messages	Displays detailed information about message.	
3. Next message key	To display next active message in list, press.	
4. Previous message key	To display previous active message in list, press.	

Drill Set-Up Menu

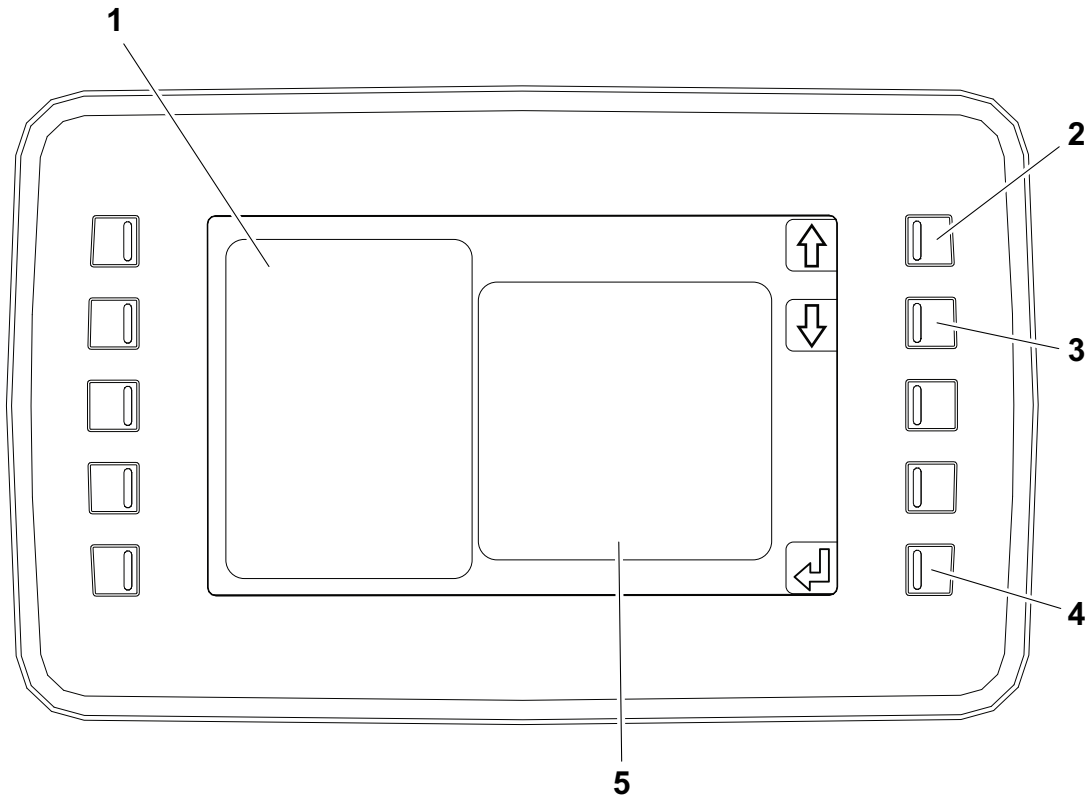

j59om120w.eps

1. System set-up indicator
2. Previous system set-up key
3. Next system set-up key
4. Return key
5. Set-up controls

Item	Description	IMPORTANT
1. System set-up indicator	Visually indicates which system is being set up.	
2. Previous system set-up key	To display previous system set-up, press.	
3. Next system setup key	To display next system set-up, press.	
4. Return key	To return to main screen (gauges), press.	

Item	Description
5. Set-up controls	• Adjust anchors, stabilizers, and frame tilt using the carriage control joystick. • Functions can be combined while setting up anchors, frame tilt, or stabilizers.  To drive anchor, move right.  To remove anchor, move left.  To raise anchor, pull.  To lower anchor, push.  To tilt frame up, pull. To tilt frame down, push.  To raise right stabilizer, push and move right.  To lower right stabilizer, pull and move right.  To raise left stabilizer, push and move left.  To lower left stabilizer, pull and move left.

Display Pop-Up Messages

Display will automatically show pop-up messages when needed. Display will return to normal once conditions are met.

Exhaust Cleaning

A pop-up message will appear when an exhaust cleaning is needed. See "Exhaust Cleaning" on page 173.

NOTICE: Failure to complete an exhaust cleaning when required can cause engine damage.

When pop-up message appears:

1. Ensure machine is away from combustible material.
2. Set to low throttle.
3. Follow on-screen prompts to initiate exhaust cleaning.

After exhaust cleaning is initiated, another pop-up message will be displayed with the estimated time remaining until process is complete. A typical exhaust cleaning cycle will take approximately 35 minutes.

IMPORTANT: If exhaust cleaning cannot be initiated when pop-up message occurs, follow on-screen prompts to return to main screen. Pop-up message will return to prompt exhaust cleaning at a later time.

Air Filter

A pop-up message will appear when air filter needs to be changed. See "Filter, Air" on page 182.

NOTICE: Failure to change air filter when required can cause engine damage.

Engine Compartment

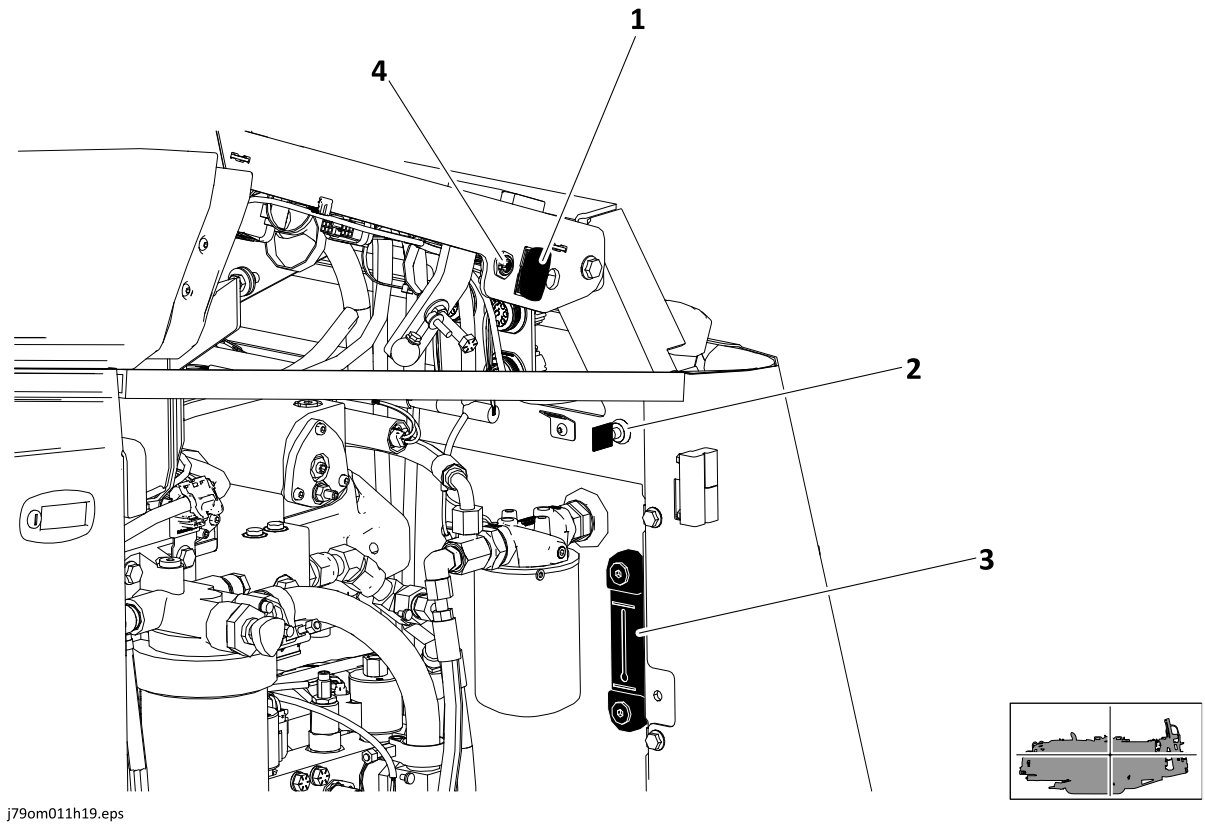

j79om011h19.eps

1. Throttle switch
2. DrillLok key
3. Hydraulic fluid and temperature sight glass
4. Pump controller EDT port

Item	Description	IMPORTANT
1. Throttle switch 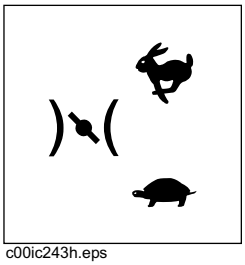 c00ic243h.eps	To increase engine speed, press top. To decrease engine speed, press bottom.	Use this switch only if throttle switch on console does not work.

Item	Description	IMPORTANT
2. DrillLok key 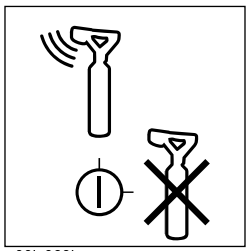 c00ic063h.eps 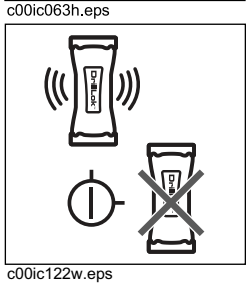 c00ic122w.eps	To allow tracker operator to stop thrust and rotation, turn key left. To override DrillLok mode, turn key right.	Top icon is shown when operating with Subsite tracker. Bottom icon is shown when operating without Subsite tracker. Remove key and keep in tracker operator's possession.
3. Hydraulic fluid and temperature sight glass	Displays hydraulic fluid level and temperature.	Normal hydraulic fluid temperature is less than 155°F (68°C).
4. Pump controller EDT port	For use only by qualified Ditch Witch technicians.	

Seat

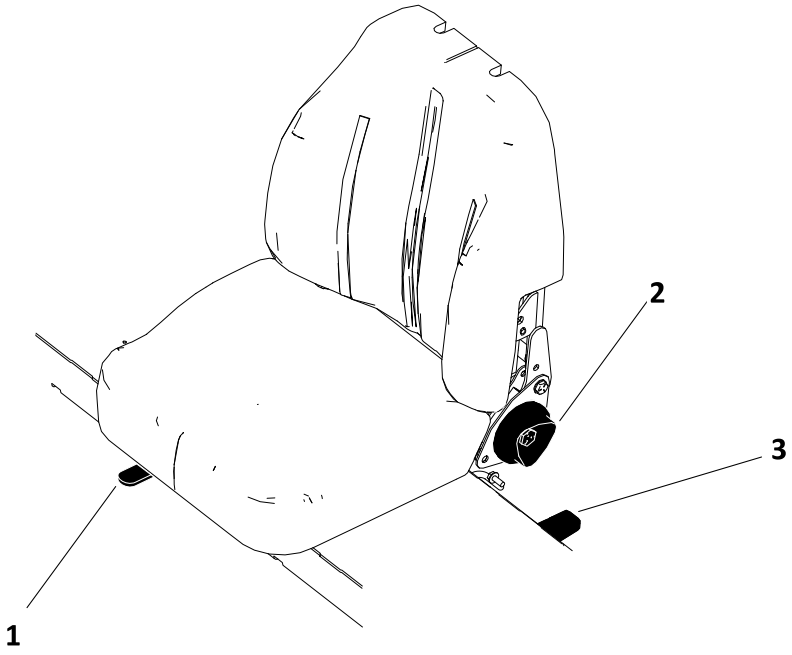

j79om013h19.eps

Item	Description	IMPORTANT
1. Slide control	To slide forward or backward, pull then adjust seat. To lock seat in position, release.	
2. Recline control	To recline back of seat, move backward. To raise back of seat, move forward.	
3. Console rotation control	To rotate, move left then adjust console. To lock console into position, release.	

Wash Wand

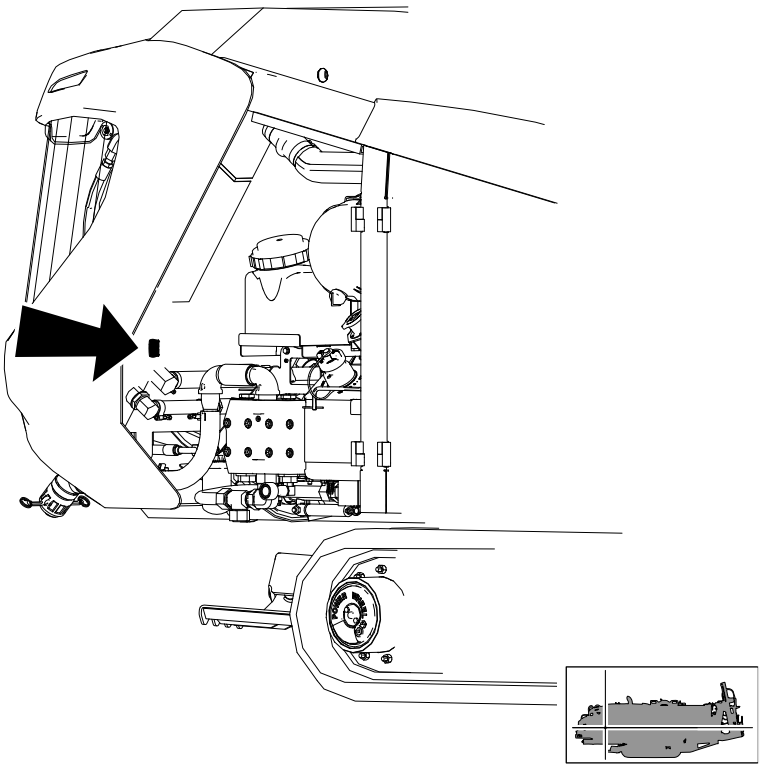

j79om014h19.eps

Item	Description	IMPORTANT
Wash wand switch 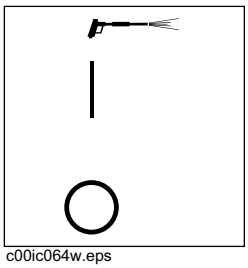 c00ic064w.eps	To turn on, press top. To turn off, press bottom.	

Drive

Chapter Contents



For additional precautions, see "Safety" and "Prepare" chapters.

IMPORTANT: For more information on how to operate controls, see "Controls" chapter.

Start 90

Steer 91

- Reduce Track Wear 93
- Slope Guidelines 92

Shut Down 93

Start

EMERGENCY SHUTDOWN: Turn ignition switch off.


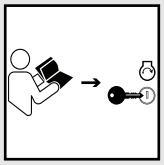

WARNING Misuse of machine can cause death or serious injury. Read and understand operator's manual and all other safety instructions before use. Know how to use all controls.

To help avoid injury:

- Allow hydraulic fluid time to warm before operating in cold weather. Cold hydraulic fluid can lengthen ground drive stopping time.
- For starting in extreme temperatures, contact your Ditch Witch dealer.




WARNING Pre-heater. Fire or explosion can cause death or serious injury. Never use starter fluid.

NOTICE: If engine turns but does not start within 30 seconds, engine ECU will prevent starting to allow starter to cool. Wait at least two minutes and try again.

1. Ensure all controls are in neutral.
2. Insert key and activate accessories using ignition switch.
3. **If starting machine in normal conditions,** start engine and run at low throttle under light load for at least three minutes before applying heavier load.

   If starting machine in cold weather:

   1. When cold start wait indicator turns off, start engine.
   2. Warm engine and hydraulic fluid by gradually increasing engine speed for up to 30 minutes.
   3. After warmup, carefully operate all hydraulic controls at low throttle until controls operate as described in controls chapter.

Steer

NOTICE:

- Drive carefully in congested areas. Know machine's clearance and turning radius.
- Survey field of vision when operating machine.

Single Joystick Ground Drive

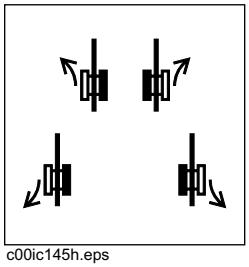
c00ic145h.eps

To steer while moving forward, push joystick and then move left or right. Machine will gradually turn.

To steer while moving in reverse, pull joystick and then move left or right. Machine will gradually turn.

For tight steering at low speed, return joystick to neutral position and then move joystick left or right. Tracks will counter-rotate and machine will turn in a tight circle.

Dual Joystick Ground Drive

To steer while moving forward, move one joystick slightly more than the other to turn in desired direction. Machine will gradually turn.

To steer while moving in reverse, move one joystick slightly more than the other to turn in desired direction. Machine will gradually turn.

For tight steering at low speed, pull one joystick and push the other to turn in desired direction. Tracks will counter-rotate and machine will turn in a tight circle.

Reduce Track Wear

Rubber tracks are best suited at soil-based jobsites with minimal rocks and debris. To reduce track wear drive slowly and make wide turns. Avoid the following:

- spinning tracks under heavy load
- turning on sharp objects such as stones, broken concrete, or debris
- quick turns on asphalt or concrete
- driving over curbs or ledges
- driving with track edges pressed against hard walls or curbs
- operating on corrosive materials such as salt or fertilizer

Slope Guidelines

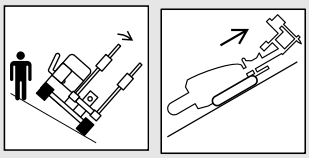

WARNING Tipover. Crushing can cause death or serious injury. Follow procedure in operator's manual. Drive cautiously.

To help avoid injury:

- Operate at slow speed when on rough terrain.
- Avoid driving across slopes.
- Never jerk control levers. Use a steady, even motion.
- Always operate from the uphill side of the machine.

Operating safely on a slope depends upon many factors including:

- distribution of machine weight (can change due to configuration)
- height of load
- even or rough ground conditions
- potential for ground giving way causing unplanned tilt forward, reverse or sideways
- nearness of ditches, ruts, stumps or other obstructions and sudden changes in slope
- speed
- turning
- braking performance
- operator skill

These varying factors make it impractical to specify a maximum safe operating angle in this manual. It is therefore important for the operator to be aware of these conditions and adjust operation accordingly. Maximum engine angle and braking performance are two absolute limits which must never be exceeded. These maximums are stated below since they are design limits. **These design limits usually exceed the operating limits and must never be used alone to establish safe operating angle for variable conditions**.

Maximum engine lubrication angle: 45°

Maximum engine operation angle: 38°

Maximum service brake retarding force: equal to traction of both tracks

Shut Down

1. When job is complete, move machine to level ground.
2. Stop machine movement.
3. Lower stabilizers to ground.
4. Lower drill frame to ground.
5. Return all controls to neutral.
6. Run engine at low throttle with no load for at least three minutes to cool.
7. Shut off machine.
8. If leaving machine unattended, remove key.
1. For maintenance or long-term storage, disconnect battery using battery disconnect switch.

> ***NOTICE:*** Wait two minutes after shutting off machine before disconnecting battery.

Transport

Chapter Contents



For additional precautions, see "Safety" and "Prepare" chapters.

IMPORTANT: For more information on how to operate controls, see "Controls" chapter.

Lift 96

- Points 96
- Procedure 96

Haul 97

- Inspect Trailer 97
- Load 98
- Tie Down 98
- Unload 100

Retrieve 100

Lift

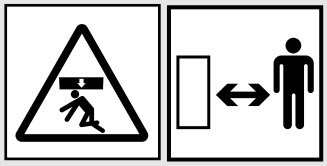

WARNING Lifted load. Crushing weight can cause death or serious injury. Stay away from lifted load and its range of movement.

Points

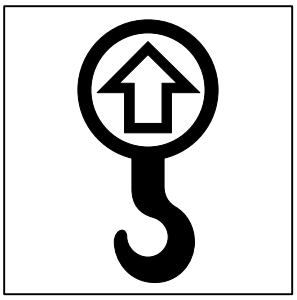
ic1319a.eps

IMPORTANT: For pipe box lifting procedures, see "Remove/Install Pipe Box" on page 153.

Lifting points are identified by lifting decals. Lifting at other points is unsafe and can damage machinery.

Procedure

This machine is not configured for lifting. If the machine must be lifted, load machine into a container or onto a platform appropriate for lifting. See "Specifications" on page 201 or measure and weigh before lifting.

Haul



WARNING Misuse of machine can cause death or serious injury. Read and understand operator's manual and all other safety instructions before use. Know how to use all controls.

To help avoid injury:

- Read trailer operator's manual before loading or transporting machine.
- Ensure tow vehicle has proper tow capacity rating.
- Incorrect loading can cause trailer swaying.
- Attach trailer to vehicle before loading or unloading.
- Load and unload trailer on level ground.
- To help prevent trailer sway, load trailer so that 10-15 percent of total vehicle weight (equipment plus trailer) is on tongue.

NOTICE: Ensure that any downhole tool or pipe in wrenches is attached to spindle or removed before transport. Wrenches can unclamp after engine shutdown.

Inspect Trailer

- Check hitch for wear and cracks.
- Check battery for 12V charge.
- Inspect lights for cleanliness and correct operation.
- Inspect reflectors and replace if needed.
- Check tire pressure.
- Check lug nut torque.
- Ensure trailer brakes are adjusted to come on with tow vehicle brakes.
- Check trailer bed for cracks.

Load

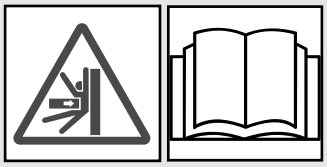

⚠ WARNING Horizontal movement. Crushing can cause death or serious injury. Read and understand operator's manual and all safety instructions before use.

1. Start engine.
2. Ensure transport mode is selected.
3. Move machine to rear of trailer and align with ramps.
4. Drive forward slowly to move machine onto trailer until tiedown position is reached.
5. Lower stabilizers to trailer bed.
6. Lower drill frame to trailer bed.
7. Shut off machine.
8. Tie down machine.
9. Ensure all covers are properly secured.

Tie Down

Points

Tiedown points are identified by tiedown decals. Securing to truck or trailer at other points is unsafe and can damage machinery.

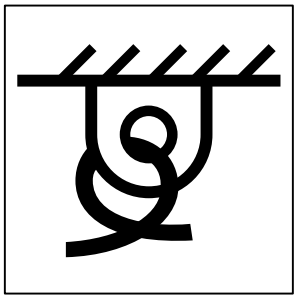

ic1320a.eps

Procedure

NOTICE: Use minimum grade 7, 3/8" (18.7 cm) transport chain to secure machine to trailer.

IMPORTANT: If hauling machine without pipe box, remove remaining pipe in drill frame chute.

Loop a transport chain around each tie down point. See chart below for correct distances between tiedown ends. Ensure tiedowns are tight before transporting.

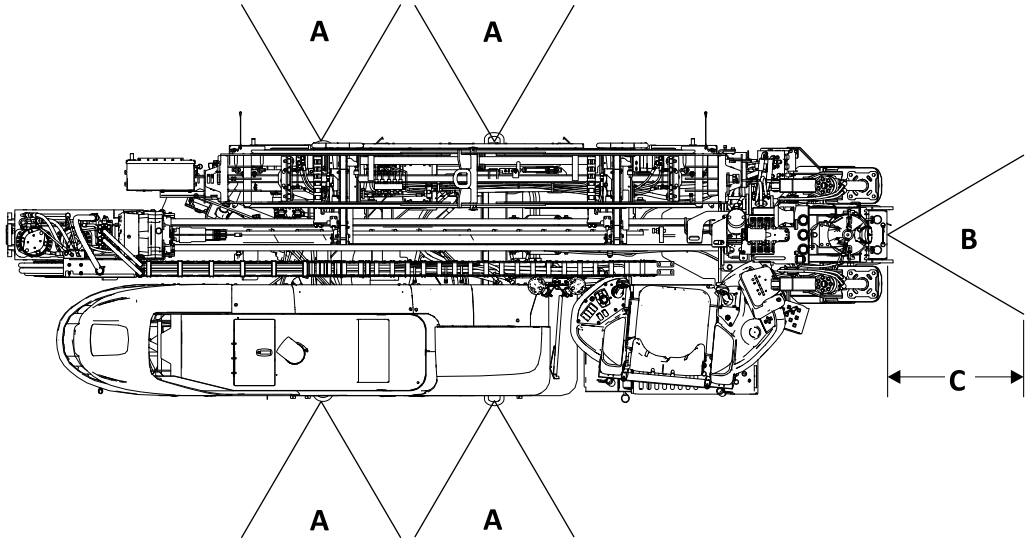

j79om015h19.eps

Distance	US	Metric
A	Greater than 18"	Greater than 45.72 cm
B	Less than 50"	Less than 127 cm
C	Greater than 10"	Greater than 25.4 cm

Unload

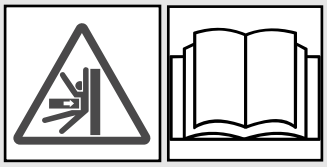

⚠ WARNING Horizontal movement. Crushing can cause death or serious injury. Read and understand operator's manual and all safety instructions before use.

1. Prepare trailer and ramps for unloading.
2. Remove tiedowns.
3. Start engine.
4. Raise stabilizers.
5. Raise drill frame.
6. Set throttle to low.
7. Slowly back machine down trailer or ramps.

Retrieve

Reverse small cover plate in center of each planetary to switch from normal operation mode (2) to towing mode (3).

NOTICE: When planetaries are disengaged, machine has no brakes.

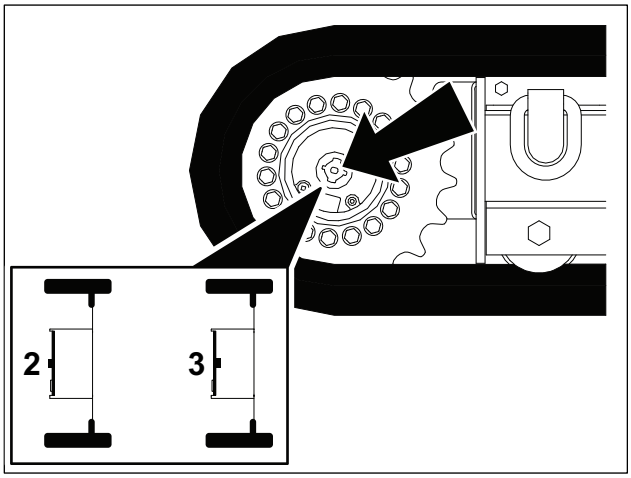

j59om011w.eps

Conduct a Bore

Chapter Contents



For additional precautions, see "Safety" and "Prepare" chapters.

IMPORTANT: For more information on how to operate controls, see "Controls" chapter.

Set Up 103

- Position Equipment 103
- Connect Fluid System 103

Start System 104

Prime Drilling Fluid Pump 104

Operate Carriage Control 105

- Drilling 105
- Assisted Makeup 105

Clamp Pipe 106

Assemble Drill String 107

- Prepare Beacon Housing 107
- Use Direct Connect Method 108
- Use EZ Connect Method 108
- Connect Drill Pipe to Downhole Tool 109

Drill First Pipe 110

Swab the Hole 111

Use Automated Pipe Loader System 111

Add Pipe 112

Correct Direction 114

- Basic Rules 114
- Procedure 114
- Drill Head Position 115

Use Autocarve Mode 115

Record Bore Path 116

Surface Drill Head 117

Backream 118

- Assemble Backream String 119
- Begin Backream 119

Remove Pipe 120

- Break Front Joint 120
- Break Rear Joint 120

Remove Pullback Device 121

Set Up

Position Equipment

1. Move equipment into selected positions. See "Select Start and End Points" on page 24.
2. Connect and test electric strike system. See "Electric Strike System" on page 145.
3. Drive anchors. See "Drive" on page 127.

Connect Fluid System

NOTICE: Do not connect machine to a public or private water supply.

1. Connect fluid hose from fluid mixer to fluid pump. A 2" (50.8 mm) or larger, non-collapsible hose is required.
2. Install y-strainer between fluid mixer and fluid pump. Position y-strainer so that fluid flows in the direction of the arrow.

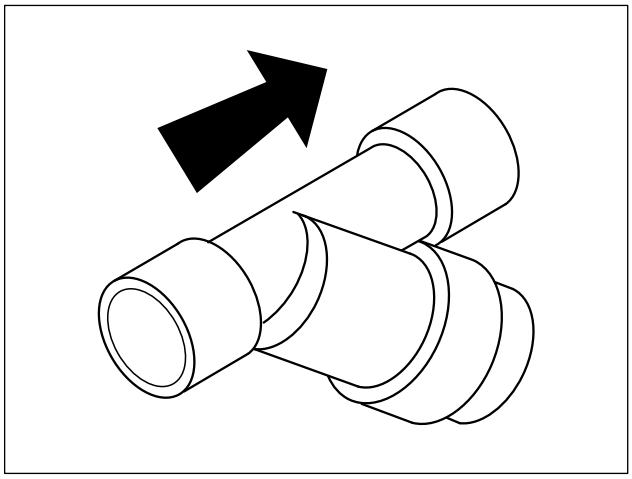

j07om057c.eps

IMPORTANT:

- In most cases, positioning y-strainer at outlet of fluid mixer gives the best results.
- Clean y-strainer regularly. See "Drilling Fluid Y-Strainer" on page 181.

Start System

1. Start engine.
2. Start fluid mixer.

> **IMPORTANT:** Ensure mixture of drilling fluid matches drilling conditions. See "Drilling Fluid" on page 141.

3. Enable DrillLok mode, if equipped. See "DrillLok System" on page 144.
4. Set to high throttle.
5. Fill pipe with drilling fluid until pressure begins to rise.

Prime Fluid Pump

> ***NOTICE:*** Failure to prime fluid pump will cause flow fluctuations, which will make it difficult to control the wash wand.

Prime fluid pump each time tank is changed. To prime:

1. Fill drilling fluid hose.
2. Connect hose to machine.
3. Operate mixing/transfer pump on fluid mixer at full speed for one to three minutes to discharge air from system.
4. Return mixing/transfer pump on fluid mixer to normal operating speed and continue bore.
5. If drilling fluid pressure surges, repeat step 3.

Operate Carriage Control

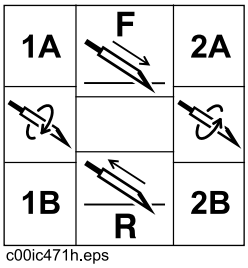

c00ic471h.eps

Drilling

IMPORTANT: Counterclockwise rotation can unthread pipe in the ground.

During normal operation, the carriage control joystick controls both thrust and rotation and allows any combination of the two based on position of the joystick.

Ref.	Function
1A	Forward thrust with clockwise rotation
2A	Forward thrust with counterclockwise rotation
1B	Reverse thrust with clockwise rotation
2B	Reverse thrust with counterclockwise rotation
F	Forward thrust with no rotation
R	Reverse thrust with no rotation

Assisted Makeup

During pipe change operation when front wrench is clamped and carriage has reached front or rear home indicator, the carriage control joystick controls only speed and direction of rotation. Thrust is automatically controlled to match speed and direction of rotation to smoothly thread or unthread pipe sections.

Ref.	Function
1A/1B	Clockwise rotation
2A/2B	Counterclockwise rotation
F	Forward thrust with no rotation
R	Reverse thrust with no rotation

Clamp Pipe

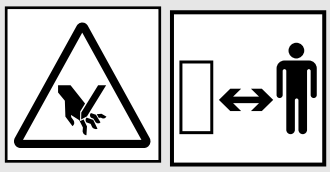

WARNING Moving parts. Contact can cause serious injury. Stay away.

Clamp pipe when joint is between wrenches (1 and 2) as shown.

NOTICE: Clamp only where indicated. Clamping anywhere else on pipe will weaken the pipe. Pipe can later break, even when operating under normal loads.

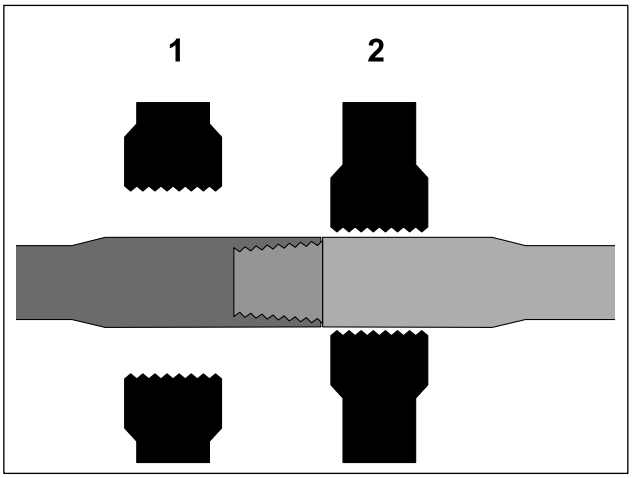

DrillPipe_Clamp.eps

Assemble Drill String



DANGER Moving or thrown tools. Impact will cause death or serious injury. Never use pipe wrenches on drill string. Follow procedure in operator's manual.

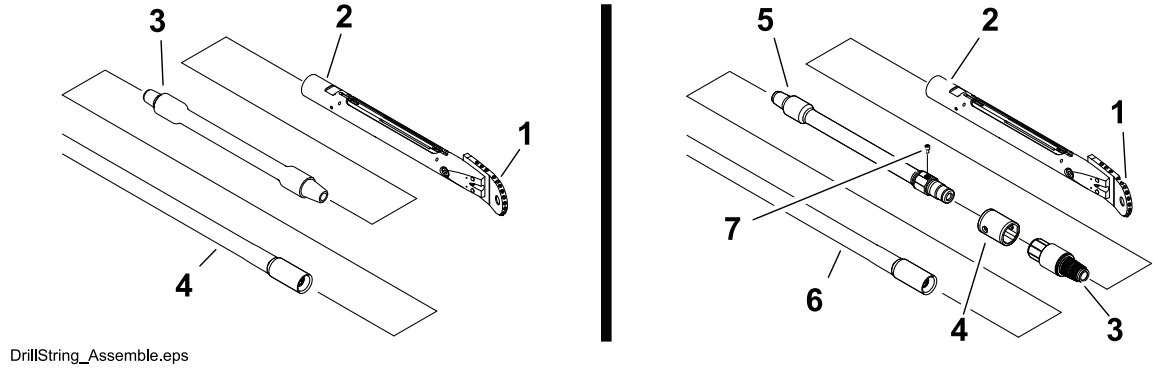

DrillString_Assemble.eps

Direct Connect Method	EZ Connect Method
1. Bit	1. Bit
2. Beacon housing	2. Beacon housing
3. Transition sub	3. Adapter
4. Drill pipe	4. Collar
	5. Transition sub
	6. Drill pipe
	7. Bolt

Prepare Beacon Housing

NOTICE: Beacon must be calibrated after installation in beacon housing. See beacon operator's manual.

IMPORTANT: Nozzle and bit selection depends on job conditions. See page 132 for more information or contact your Ditch Witch dealer.

1. Select nozzle, if needed.
2. Select bit.
3. Attach bit to beacon housing.
4. Install beacon. See beacon operator's manual.
5. Install beacon housing lid.

Use Direct Connect Method

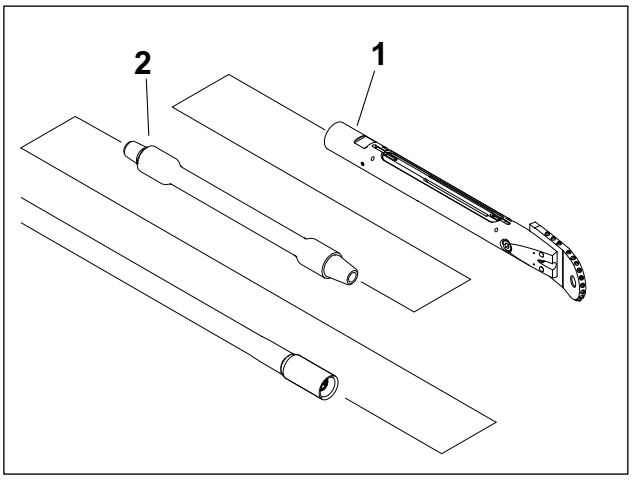

j59om122w.eps

1. Start engine.
2. Position transition sub (2) in front wrench.
3. Apply tool joint compound.
4. Clamp front wrench.
5. Slowly move carriage forward until SaverLok meets transition sub.
6. Rotate spindle clockwise until SaverLok threads onto transition sub.
7. Stop engine.
8. Connect beacon housing (1) to transition sub.
9. Start engine.
10. Position joint between wrenches.
11. Use machine torque to tighten joint fully.

Use EZ Connect Method

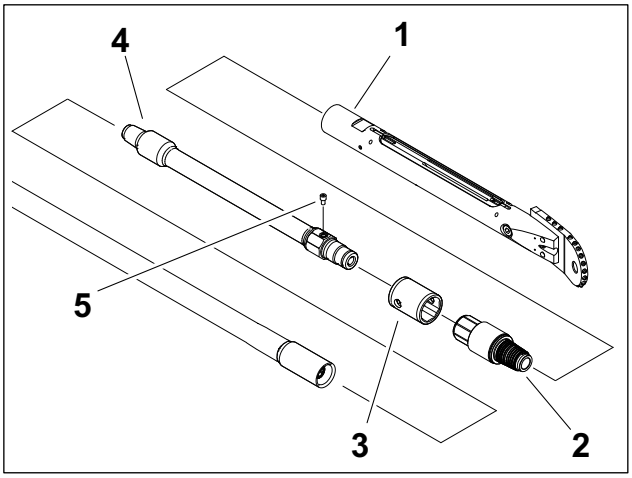

j59om133w.eps

1. Apply tool joint compound to adapter threads.
2. Use quick wrench to connect adapter (2) to beacon housing (1).
3. Slide collar (3) onto transition sub (4).
4. Apply tool joint compound to threads.
5. Connect adapter to transition sub.
6. Unthread connection at least one full flat to align flats.

IMPORTANT: Joint will not be tight. Assembly should have visible gap at shoulder.

7. Slide collar over flats on both transition sub and adapter, ensuring hole in collar is aligned with hole in transition sub.
8. Install bolt (5).

Connect Drill Pipe to Downhole Tool

1. Start engine.
2. Clamp tool in front wrench.
3. Load pipe.
   - Ensure shuttle stop is positioned correctly.
   - Apply tool joint compound to threads in front wrench.
   - Lower pipe lifters.
   - Close grippers.
   - Extend shuttles.
4. Connect pipe to SaverLok body.

   IMPORTANT: Always rotate clockwise unless breaking pipe joint. Rotating counterclockwise will separate joints.

   - Move carriage forward until SaverLok meets pipe.
   - Rotate spindle clockwise until SaverLok threads onto pipe.
   - Relax grippers.
5. Connect pipe.
   - Slowly move carriage forward to allow pipe to match up.
   - Rotate spindle clockwise until pipe threads together.
   - To fully tighten joint, slowly rotate pipe until spindle stops turning.
   - Unclamp wrench.
   - Open grippers fully.
   - Raise pipe lifters.
   - Retract shuttles.

Drill First Pipe

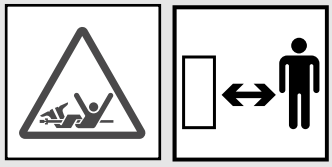

DANGER Rotating shaft. Crushing will cause death or serious injury. Stay away.

To help avoid injury:

- The tracker operator must have communication with the drill operator or DrillLok system must be enabled with the DrillLok key in the operator's possession.
- Do not stand or walk over the bore path while drill string is moving during drilling and backreaming.



WARNING Underground utilities. Contact can cause death or serious injury. Locate and verify underground utilities before digging or drilling.

To help avoid injury:

- Use electric strike system.
- Expose line by careful hand digging or soft excavation. Use beacon to track bore path. If utility must be crossed, tracker operator must watch the drill head during drilling and backreaming. Consider type and stability of soil. Take precautions to ensure ground does not give way under tracker operator.

1. Turn on drilling fluid.
2. Visually check for drilling fluid flow.
3. Slowly move carriage forward. Drill first pipe as straight as possible.
4. Monitor gauges.

Swab the Hole

Swab the hole as needed after each pipe is drilled to remove cuttings and keep the bore clear.

IMPORTANT: Some conditions may require more frequent swabbing.

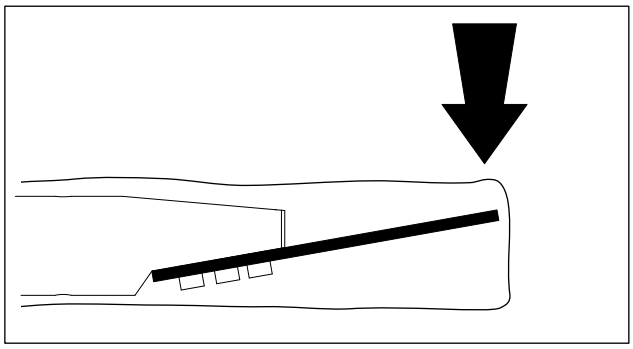
SwabHole_JT.eps

1. Move carriage forward until it reaches front of drill frame.
2. Move carriage to rear of drill frame with drilling fluid on.
3. Move carriage forward until pipe joint is properly located between wrenches for joint breakout.

Use Automated Pipe Loader System

IMPORTANT: If operator leaves the seat during an add or remove pipe cycle, pipe cycle will pause. When operator returns to the seat, the system must be re-enabled.

Add Pipe	**Remove Pipe**
1. Enable automated add pipe function. 2. Ensure pipe box is properly positioned. If pipe box row is empty, select next full row. 3. Unclamp front wrench. 4. Retract shuttles. 5. Set to high throttle. 6. Add pipe. Grippers will open, pipe will be lifted, pipe box checked, then lowered into shuttles.	1. Enable automated remove pipe function. 2. Ensure pipe box is properly positioned. 3. If pipe box row is full, select next empty row. 4. Unclamp front wrench. 5. Retract shuttles. 6. Set to high throttle. 7. Remove pipe. Grippers will open, pipe will be lowered and lifted out of shuttles.

Add Pipe

1. Turn autothrottle on.
2. Enable automated pipe loader system (optional).
3. Break joint at SaverLok.
   - Position pipe between wrenches. See "Align the Joints" on page 139.
   - Locate drill head.
   - Rotate pipe to 3 o'clock.
   - Clamp front wrench.
   - Rotate spindle counterclockwise. Carriage will slowly move back as threads separate.
   - After threads are fully separated, stop rotation and move carriage back until rear stop indicator lights. If automated pipe loader mode is selected, tool joint compound will be applied while carriage is moving.
4. Load pipe.

Manual Pipe Loader Controls	Automated Pipe Loader Controls
• Ensure that pipe lifters are completely lowered. • Close grippers. • Extend shuttles. • Apply tool joint compound at wrench. • Raise pipe lifters.	• If pipe box row is empty, select next full row. • With carriage at rear stop position, resume. Display will change to "Adding Pipe," pipe will be moved to spindle, and pipe box will be lifted.

5. Connect pipe to SaverLok.

IMPORTANT: Always rotate clockwise unless breaking pipe joint. Rotating counterclockwise will separate joints.

   - Move carriage forward until SaverLok meets pipe.
   - Rotate spindle clockwise until SaverLok threads onto pipe.
   - Relax grippers, or resume if using automated pipe loader mode.

6. Connect new pipe.

Manual Pipe Loader Controls	Automated Pipe Loader Controls
• Slowly move carriage forward to allow pipe to match up. • Rotate spindle clockwise until pipe threads together. • To fully tighten joint, slowly rotate pipe until spindle stops turning. • Open grippers fully. • Retract shuttles. • Lower pipe lifters. • Unclamp wrench.	• Slowly move carriage forward to allow pipe to match up. • Rotate spindle clockwise until pipe threads together. • Resume. Grippers will open, shuttles will retract, and pipe lifters will lower. • To fully tighten joint, slowly rotate pipe until spindle stops turning. • Unclamp wrench.

7. Turn on drilling fluid until pipe fills and fluid pressure begins to rise.
8. Adjust fluid flow.
9. Rotate spindle.
10. Slowly move carriage forward.
11. Adjust rotation speed according to bit size and soil conditions. See "Systems and Equipment" on page 123.
12. Set cruise control (optional). See "Cruise Control" on page 129.
13. Monitor gauges.
14. Locate drill head with tracker at least every half-length of pipe.

> ***NOTICE:*** All tracking equipment is subject to magnetic interference. The presence of interference can cause inaccuracies in both location and depth calculations. See tracker operator's manual for more information.

Correct Direction

Correcting direction is a skill operators gain with experience and knowledge of equipment and soil conditions. These instructions cover only basic procedures. For information about specific equipment or jobsites, contact your Ditch Witch dealer.

To track progress and make corrections, one crew member locates the drill head and sends instructions to the operator. Corrections are made by tracking the drill head, comparing the current position to bore plan, and steering drill head as needed.

Basic Rules

- Steering ability depends on soil condition; bit, drill head, and nozzle used; roll of drill head; and distance pushed without rotation.
- All corrections should be made as gradually as possible. See "Recommended Bend Limits" on page 30.
- Over correcting will cause "snaking." This can damage pipe and will make drilling and pullback more difficult. Begin to straighten out of each correction as early as possible.
- Do not push an entire piece of drill pipe into ground without rotation.This can exceed bend radius and cause pipe failure.

Procedure

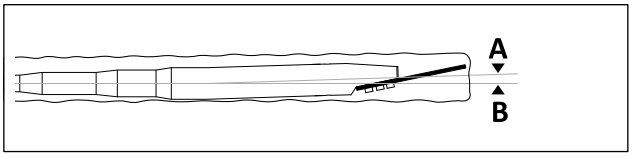

Correct_Direction_JT.eps

1. Locate drill head. Take reading available with beacon and tracking equipment such as:
   - depth

     IMPORTANT: Depth estimate improves if drill head is at 3 o'clock position (A) rather than horizontal (B).

   - pitch
   - left/right information
   - temperature
   - beacon roll
2. Compare position to bore plan to determine direction.
3. Position drill head.
4. Drill pipe.

Drill Head Position

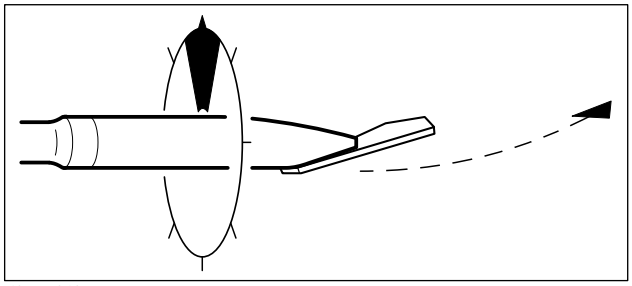
j07om048c.eps

The drill head position is determined by reading beacon roll. Roll is displayed as a clock face position.

1. Read beacon roll.
2. Slowly rotate pipe until tracking equipment displays desired beacon roll.

To change direction:

1. Rotate pipe to intended clock position.
2. Push pipe into ground.

To move forward without changing direction:

1. Rotate pipe.
2. Push pipe into ground.

Use Autocarve Mode

IMPORTANT:

- Two-speed carriage control and cruise control are disabled while in autocarve mode.
- Autocarve mode is disabled while front wrench is clamped.
- Adding or removing pipe does not affect autocarve mode.

Autocarve helps the operator change direction when thrust stalls in difficult soil conditions while drilling. Autocarve rotates the bit clockwise and counterclockwise to grind away soil, clearing a path to improve steering through tough formations.

Movement	Description
Alternating clockwise and counterclockwise rotation	Enables downhole tool to carve tough soil formations. Rotation speed can be adjusted during autocarving. ***NOTICE:*** To reduce the chance of unthreading pipe sections downhole, rotation pressure is limited during counterclockwise rotation. However, the operator should monitor carve operation and adjust thrust and rotation to prevent unthreading.
Carve window	The range of alternating rotation.

Movement	Description
Thrust	In autocarve mode, initial thrust speed is very slow or fully stopped. Adjust speed anytime during carving.
Pullback	Thrust and rotation operate normally when joystick is pulled. High-speed pullback is not available in autocarve mode.

1. Rotate drill head to desired position to position downhole tool for carving.
2. Enable autocarve.
3. Move carriage control joystick forward and return to neutral to begin carving.

   IMPORTANT: Pull carriage control joystick to pause carving.

4. Adjust thrust speed using set/resume switch. Adjust as needed while carving.
5. Set carve window. Adjust as needed while carving.
6. Adjust rotation speed using set/resume switch. Adjust as needed while carving. Use multi-use button for finer adjustment.

   IMPORTANT: Using multi-use button activates reaming function and will change steering direction unless tool is stopped at original position before releasing multi-use button.

7. After carving a few inches, press and hold multi-use button and rotate clockwise for several full rotations to drill out the carved section. When tool rotates freely, reduce rotation speed and stop at desired carve position. Release multi-use button and resume carving.

   IMPORTANT: If rotation is restricted, move carriage back slightly until full rotation is possible, then move carriage forward while rotating.

8. Exit autocarve mode and continue normal drilling.

   IMPORTANT: Autocarve settings are retained until machine is turned off.

Record Bore Path

Locate drill head every half-length of pipe. As job is completed, record actual data for each drill pipe. List pitch and depth of each joint and a brief description of procedure. In addition, draw a simple sketch of jobsite and record depth and rough location of pullback.

Subsite bore tracking software is also available for plotting and tracking bore path. This software utilizes a Subsite tracking system, including tracker, display, tracking beacon, and special software. The display can store jobs in its memory or the system can be run in the field using a laptop computer. Contact your Ditch Witch dealer for more information.

Surface Drill Head



DANGER Moving or thrown tools. Impact will cause death or serious injury. Never use pipe wrenches on drill string. Follow procedure in operator's manual.

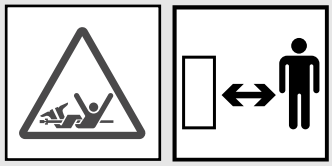

DANGER Rotating shaft. Crushing will cause death or serious injury. Stay away.

To help avoid injury:

- Tracker operator and drill operator should maintain two-way communication.
- Drill operator should be instructed to discontinue drill string rotation as soon as drill bit exits the bore. Use only thrust to extend drill string beyond exit hole.
- Keep everyone clear of the exposed drill string.
- Only enter pit when clear communication is given by the drill operator that the machine is shut down. If using DrillLok mode, only enter pit when DrillLok mode is turned off and DrillLok indicator is lit. See "DrillLok System" on page 144.

1. Steer drill head to target pit or up through surface.

   NOTICE: See "Recommended Bend Limits" on page 30.

2. Turn drilling fluid off as soon as drill head emerges.
3. If using DrillLok mode, allow tracker operator to remotely disable thrust/pullback and rotation. Tracker operator must ensure DrillLok indicator is lit before changing downhole tools.

   If not using DrillLok mode, turn off machine and keep key in tracker operator's possession before changing downhole tools.
4. Clean drill head.

   IMPORTANT: Ensure threads remain clean.

5. Disconnect EZ Connect joint or use quick wrench to remove drill head. See "Quick Wrench" on page 136.

Backream



DANGER Moving or thrown tools. Impact will cause death or serious injury. Never use pipe wrenches on drill string. Follow procedure in operator's manual.

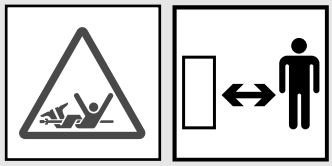

DANGER Rotating shaft. Crushing will cause death or serious injury. Stay away.

To help avoid injury:

- Ensure swivel turns freely with product attached.
- Tracker operator and drill operator should maintain two-way communication.
- Begin backream only when tracker operator has communicated that everyone is clear of the exposed backream string or has enabled thrust and rotation hydraulics using DrillLok system.
- Never allow anyone to stand to the side of the exposed drill string. Drill string and backreamer can move sideways suddenly if rotated while away from the exit hole.



WARNING Underground utilities. Contact can cause death or serious injury. Locate and verify underground utilities before digging or drilling.

To help avoid injury:

- Continue to use electric strike system during backreaming.
- Watch utility crossings. Consider size of backreamer and ensure there is adequate space between existing utility and backreamer.

NOTICE: Number of passes needed depends on soil conditions. Do not attempt to increase hole size too much in one pass. Several passes using successively larger reamers will be more successful.

If needed, enlarge pilot hole to accommodate larger product. Final hole should be 1.5 times larger than the diameter of product being installed.

Assemble Backream String

NOTICE: Beacon must be calibrated after installation in beacon housing. See beacon operator's manual.

1. Select backreamers. See "Backreamers" on page 132.
2. Determine drilling fluid flow requirements and install appropriate nozzles to provide sufficient fluid flow. See page 132 and page 141 for more information.
3. Attach backreamer to beacon housing if tracking backream.
4. Install beacon. See beacon operator's manual.
5. Install beacon housing lid.
6. Attach transition sub to drill pipe string.
7. Attach backreamer assembly to transition sub.
8. Attach additional pullback devices or product to end of backreamer assembly.

Begin Backream

1. After backream assembly is attached to pipe, allow tracker operator to leave pit and stand away from exposed drill string.
2. If using DrillLok mode, allow tracker operator to turn on tracker to enable thrust/pullback and rotation.
   If not using DrillLok mode, wait for tracker operator to communicate that backream string is clear.
3. Turn on drilling fluid until pipe fills and fluid pressure begins to rise.
4. Without rotating, slowly pull back until reamer contacts bore opening.
5. Begin slow rotation and pullback.
6. Increase drilling fluid flow and rotation as backream string enters ground.
7. Monitor gauges.
8. Locate backreamer with tracker at least every half-length of pipe.

Remove Pipe

Enable automated pipe loader system (optional). If pipe box row is full, select next empty row.

Break Front Joint

1. Position pipe joint between wrenches.
2. Clamp front pipe. See "Clamp Pipe" on page 106.
3. Clamp rear wrench. Wrench will rotate counterclockwise, breaking front joint.

Manual Pipe Loader Controls	Automated Pipe Loader Controls
• Open grippers. Ensure grippers are opened fully. • Extend shuttles.	Resume. Shuttles will extend, grippers will close fully, then relax, pipe lifters will lower.

4. Unclamp rear wrench. Wrench will rotate clockwise to original position.
5. Rotate spindle counterclockwise to separate pipe.

Break Rear Joint

1. Clamp rear wrench. Wrench will rotate counterclockwise.
2. Rotate spindle counterclockwise until joint is loosened at SaverLok.

> **IMPORTANT:** Do not fully unthread joint.

3. Unclamp rear wrench.
4. Move carriage back until front end of pipe clears front face of wrench mount plate (shown).

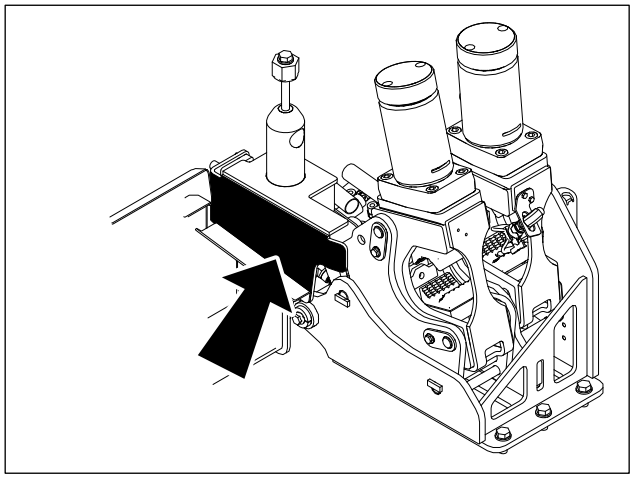

j79om016h19.eps

5. Grip pipe.

Manual Pipe Loader Controls	Automated Pipe Loader Controls
Close grippers.	Resume. Grippers will close automatically.

6. Rotate spindle counterclockwise until SaverLok is separated from pipe.
7. Move carriage back until rear stop indicator lights.

8. Return pipe to pipe box.

Manual Pipe Loader Controls	Automated Pipe Loader Controls
• Retract shuttles. • Raise pipe lifters. Grippers will open as pipe is lifted.	Resume. Shuttles will retract, pipe lifters will raise.

9. Attach SaverLok to next pipe.
   - Move carriage forward until SaverLok touches pipe.
   - Rotate spindle clockwise. Carriage will slowly move forward as pipe is connected.
   - To fully tighten joint, slowly rotate pipe until spindle stops turning.
10. Unclamp front wrench to release pipe.

Remove Pullback Device



DANGER Moving or thrown tools. Impact will cause death or serious injury. Never use pipe wrenches on drill string. Follow procedure in operator's manual.

Pullback device can be removed when last pipe is on drill frame.

IMPORTANT: Pullback device can also be removed when target pit along bore path has been reached. Remaining pipe is then pulled back and removed.

1. Set to low throttle.
2. Turn drilling fluid off.
3. Shut off machine
4. Clean pullback device.
5. Disconnect pullback material.
6. Remove pullback device using quick wrench. See "Quick Wrench" on page 136.

Systems and Equipment

Chapter Contents



For additional precautions, see "Safety" and "Prepare" chapters.

IMPORTANT: For more information on how to operate controls, see page 41.

Anchor System 126

- Select 126
- Drive 127
- Remove 127
- Alternate Grounding 128

Cruise Control 129

- Engage 129
- Adjust Settings 129
- Override 130
- Disengage 130
- Resume 130

Diagnostic Codes 131

- Electronic Controlled Engine Overview 131
- Machine Diagnostics System Overview 131
- Reading Engine Diagnostic Codes 131

Downhole Tools 132

- Backreamers 132
- Backreaming Fluid Requirements 133
- Beacon Housings 134
- Bits 135
- Quick Wrenches 136
- Nozzles 137

Drill Pipe 138

- Perform Regular Drill Pipe Care 138
- Use Drill Pipe Correctly 139

Drilling Fluid 141

- Recommended Products 141
- Mixtures 142
- Funnel Viscosity 143

DrillLok System 144

Electric Strike System 145

- Assemble Voltage Detector 145
- Test Strike System 146
- Troubleshoot Strike System 146
- Use Electric Strike Simulator 148

Pipe Loader 150

- Add/Remove Single Pipe 150
- Correct Dropped Pipe 152
- Correct Misaligned or Jammed Pipe 152
- Remove/Install Pipe Box 153
- Rotate Drill Pipe Order 155
- Row Select 155

Sensor Override 156

Wireless Remote Control 158

- Set Up 158
- Operation 159
- Troubleshooting 160

Anchor System

This machine can be anchored using standard anchoring.

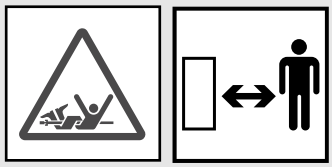

DANGER Rotating shaft. Crushing will cause death or serious injury. Stay away.

To help avoid injury: Never replace anchor collar bolt with one longer than original. Clothing could catch on turning shaft.



DANGER Underground utilities. Contact can cause death or serious injury. Locate and verify underground utilities before digging or drilling.

To help avoid injury: If you are not driving anchors to full depth, drive optional ground rod into soil away from machine and connect ground rod to machine.

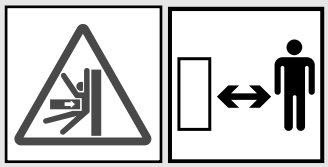

WARNING Horizontal movement. Crushing can cause death of serious injury. Read and understand operator's manual and all safety instructions before use.

To help avoid injury:

- Set stabilizers prior to driving anchors.
- Drive anchors and/or tie off machine before drilling.
- Remain safe distance away when driving anchors with wireless remote control.

Select

There are three anchor options for this machine. Choose the correct anchor type based on job conditions as shown below.

Anchor Type	Jobsite Conditions
Rock bit	Hard/soft rock, asphalt, concrete, cobble
Auger bit	Soft/hard soil, soft rock
Straight bit	Hard soil

Drive

IMPORTANT: Do not attempt to operate anchor controls while drilling fluid is on.

1. Install centering cap.

   NOTICE: Centering cap must be properly installed to prevent damage to anchor.

   Centering cap is properly installed when:

   - Hardware (1) is secure but not over-tightened.
   - Centering cap (2) is free to slide back and forth inside centering tube (3) under normal load.

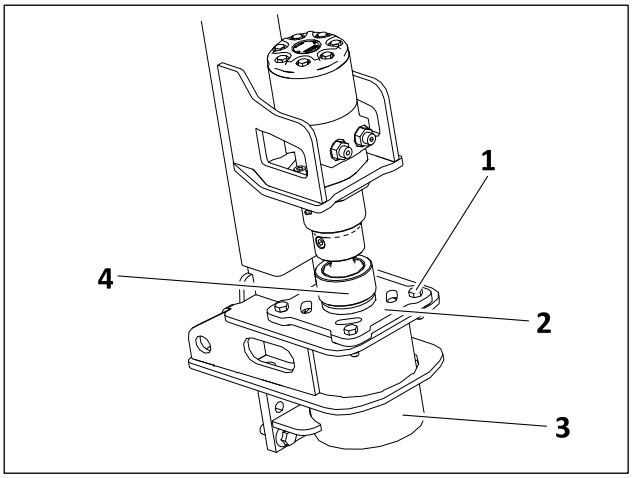

j79om017h19.eps

2. Use high speed rotation and low thrust to drive anchor into the ground.

   IMPORTANT: Carefully time anchor rotation with anchor movement. Properly driven anchors should not auger up soil.

3. Anchor is set when auger shaft stop collar (4) rests firmly on centering cap.
4. Repeat process for other anchor.

Remove

1. Use anchor controls to slowly remove anchor from ground.
2. Repeat process for other anchor.

Alternate Grounding

IMPORTANT: If not using anchors, additional grounding will need to be done for the machine using external kit 100-794. Contact your Ditch Witch dealer for more information.

IMPORTANT: Remove paint from all surfaces prior to installing grounding kit.

Connect ground included in grounding kit to anchor valve as shown.

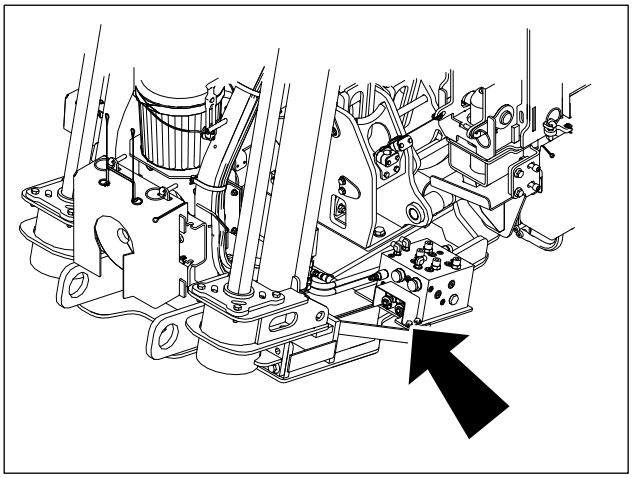

j79om019h19.eps

Cruise Control

During the bore, thrust/pullback and rotation can be set to match ground conditions. Cruise control enables the machine to maintain these settings hands-free. These settings can be engaged, disengaged, overridden, and resumed at any time.

Engage

IMPORTANT: In order for cruise control to function, front wrench must be unclamped and shuttles must be fully retracted.

1. Position joystick to desired thrust or pullback settings.
2. Position joystick to desired rotation setting (optional).
3. Press set. Cruise mode indicator will appear on display.
4. If using cruise control for thrust/pullback and rotation, release joystick. If not using cruise control for rotation, use joystick to control rotation.

Adjust Settings

IMPORTANT: To make fine adjustments, press and hold the multi-use button while adjusting.

Thrust/Pullback

To increase thrust or pullback speed, move joystick to neutral position and press resume.

To decrease thrust or pullback speed, move joystick to neutral position and press set.

Rotation

To increase rotation speed, move joystick to left and press resume.

To decrease rotation speed, move joystick to left and press set.

Override

To override thrust/pullback settings, move joystick out of neutral and beyond current setting. Machine will increase to joystick setting.

To return to previous setting, release joystick.

Disengage

To disengage cruise control, move joystick out of neutral in opposite direction of carriage travel. Cruise mode indicator on display will turn off and carriage will stop moving.

Resume

Move joystick out of neutral in direction to be resumed (forward or backward) and press resume. Thrust and rotation will resume at the previous settings and cruise mode indicator will appear on display. See "Set/Resume switch" on page 54.

Diagnostic Codes

This machine is equipped with two diagnostic systems: engine and machine. The engine diagnostic system detects errors within the engine operating system and communicates fault codes on the display. The machine diagnostic system detects errors within the automated machine control system. These error codes are also displayed on the upper display.

Use the display to hide/recall active codes. Note the SPN, FMI, and description of the diagnostic code for future reference.

IMPORTANT: Do not turn off engine. Diagnostic codes are cleared each time ignition is turned off.

Electronic Controlled Engine Overview

This machine is equipped with a self-diagnostic computer-controlled engine management system. An Electronic Control Unit (ECU) monitors engine performance and makes adjustments to optimize that performance.

Indicators, plus diagnostic codes and messages, on the display tell the operator about potential engine problems. Depending on the severity of the problem, the ECU may reduce engine power or speed or may shut the engine down. The ECU also stores all diagnostic codes regardless of severity.

Machine Diagnostic System Overview

Use the display to view condition of the machine automation diagnostic system. Under normal operating conditions, any diagnostic code that is recorded will be shown as a pop-up message on the display.

Reading Engine Diagnostic Codes

Engine diagnostic codes are shown in pop-up messages on the display. Amber or yellow messages indicate problems that should be addressed but do not need immediate attention. Red messages indicate problems that need immediate attention. Failure to address a problem indicated by a red message will generally result in the engine derating or shutting down.

Downhole Tools

The chart below should be used when selecting downhole tools.

Soil	Description
Sandy	Sugar sand, blow sand, or other soils where sand is the predominant component
Soft	Sandy loam
Medium	Loams, loamy clays
Hard	Packed clays, gumbo, all compacted soils
Cobble rock	Chunk rock, glacial till, cobble, gravel
Soft rock	Sandstone, shale, coral, caliche, chaulk
Medium rock	Limestone, caliche, sandstone, shale
Hard rock	Granite, schist, marble, hard limestone

Backreamers

A backreamer enlarges the hole as pipe is pulled back through the bore. No one backreamer works well in all conditions. These charts are meant as a guideline only. Contact your Ditch Witch dealer for soil conditions and backreamer recommendations for your area.

- 1 = best
- 2 = good
- 3 = fair
- 4 = not recommended

Backreamer	Sandy Soil	Soft Soil	Medium Soil	Hard Soil	Rocky Soil	Soft Rock	Hard Rock
Beavertail HD	2	1	1	1	4	4	4
Compact Fluted HD	3	3	1	2	2	3	4
EZ	3	1	2	2	3	3	4
Kodiak™ HD	3	3	3	2	1	2	3
Rockmaster®	4	4	4	4	3	1	1
Sandhog HD	1	1	2	3	3	4	4
Warthog™ HD	4	3	2	1	2	2	3

Backreaming Fluid Requirements

Backreaming is only successful when enough fluid reaches the bore. The amount of fluid needed depends on size of bore and soil condition.

Follow these steps to find the minimum amount of fluid needed in perfect conditions.

IMPORTANT: Using less than the recommended amount of fluid can cause bore to be dry and unsuccessful.

Instructions	Example
1. Find amount of fluid needed for your size of backreamer. See the following table.	6" (152 mm) backreamer requires at least 1.47 gal/ft (18.24 L/min)
2. Multiply this number by distance per minute you plan to backream. The answer is an estimate of amount of fluid you will need for each minute of backreaming.	1.5 gal (18 L) x 2'/min (0.5 m/min) = 3 gal (9 L) for each minute of backreaming

Backreamer/Product Diameter	Gal/ft	L/m	Backreamer/Product Diameter	Gal/ft	L/m
0.5" (13 mm)	0.01	0.13	13.5" (343 mm)	7.44	92.35
1" (25 mm)	0.04	0.51	14" (356 mm)	8.00	99.31
1.5" (38 mm)	0.09	1.14	14.5" (368 mm)	8.58	106.54
2" (51 mm)	0.16	2.03	15" (381 mm)	9.18	114.01
2.5" (64 mm)	0.25	3.17	15.5" (394 mm)	9.80	121.74
3" (76 mm)	0.37	4.56	16" (406 mm)	10.44	129.72
3.5" (89 mm)	0.50	6.21	16.5" (419 mm)	11.11	137.95
4" (102 mm)	0.65	8.11	17" (432 mm)	11.79	146.44
4.5" (114mm)	0.83	10.26	17.5" (445 mm)	12.49	155.18
5" (127 mm)	1.02	12.67	18" (457 mm)	13.22	164.17
5.5" (140 mm)	1.23	15.33	18.5" (470 mm)	13.96	173.42
6" (152 mm)	1.47	18.24	19" (483 mm)	14.73	182.92
6.5" (165 mm)	1.72	21.41	19.5" (495 mm)	15.51	192.68
7" (178 mm)	2.00	24.83	20" (508 mm)	16.32	202.68
7.5" (191 mm)	2.29	28.50	20.5" (521 mm)	17.15	212.94
8" (203 mm)	2.61	32.43	21" (533 mm)	17.99	223.46

Backreamer/Product Diameter	Gal/ft	L/m	Backreamer/Product Diameter	Gal/ft	L/m
8.5" (216 mm)	2.95	36.61	21.5" (546 mm)	18.86	234.23
9" (229 mm)	3.30	41.04	22" (559 mm)	19.75	245.25
9.5" (241 mm)	3.68	54.73	22.5" (572 mm)	20.65	256.52
10" (254 mm)	4.08	50.67	23" (584 mm)	21.58	268.05
1.5" (267 mm)	4.50	55.86	23.5" (597 mm)	22.53	279.83
11" (279 mm)	4.94	61.31	24" (610 mm)	23.50	291.86
11.5" (292 mm)	5.40	67.01	24.5" (622 mm)	24.49	304.15
12" (305 mm)	5.88	72.97	25" (635 mm)	25.50	316.69
12.5" (318 mm)	6.37	79.17	25.5" (648 mm)	26.53	219.49
13" (330 mm)	6.90	85.63	26" (660 mm)	27.58	342.53

Beacon Housings

Dirt Housing Lid Installation

1. Clean all threads, bolt holes, and mating surfaces.
2. Use removable thread locker (Loctite® 242 or equivalent).
3. Place lid on trough and install bolts (1).
4. Use punch holder (3) to drive roll pins (2) from direction shown.

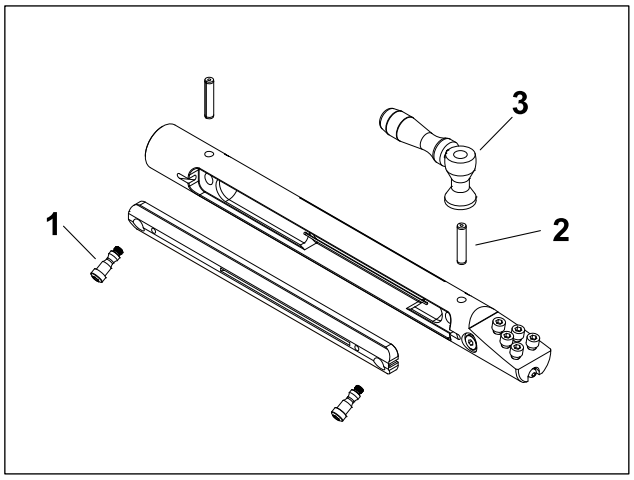

BeaconHousingLid.eps

Bits

Selection

These charts are meant as a guideline only. No one bit works well in all conditions. Contact your Ditch Witch dealer for soil conditions and bit recommendations for your area.

- 1 = best
- 2 = good
- 3 = fair
- 4 = not recommended

Bit	Sandy Soil	Soft Soil	Medium Soil	Hard Soil	Rocky Soil	Soft Rock	Hard Rock
Barracuda	2	1	1	2	3	4	4
Glacier	4	4	4	3	1	2	4
Hard Surface	3	1	2	3	4	4	4
Omni™	1	1	1	1	2	2	4
Rhino	4	4	3	3	1	1	3
Rockmaster®	4	4	3	2	1	1	1
Sand™	1	2	3	4	4	4	4
Steep Taper	2	2	1	2	2	3	4
Steep Taper Tuff	2	2	1	1	2	1	4
Talon	3	3	2	1	1	2	4
Tornado	2	2	2	1	1	3	4
Tuff	3	2	1	1	3	1	4

Installation

Remove all paint and primer from mating surfaces before attaching any bit to housing. Install screws and tighten bolts to 120 ft•lb (163 N•m).

Quick Wrench



DANGER Moving or thrown tools. Impact will cause death or serious injury. Never use pipe wrenches on drill string. Follow procedure in operator's manual.

NOTICE: Apply tool joint compound to threads and hand-tighten joint before attaching quick wrench components to tighten joint.

Attach

Attach quick wrench in either the join or break position.

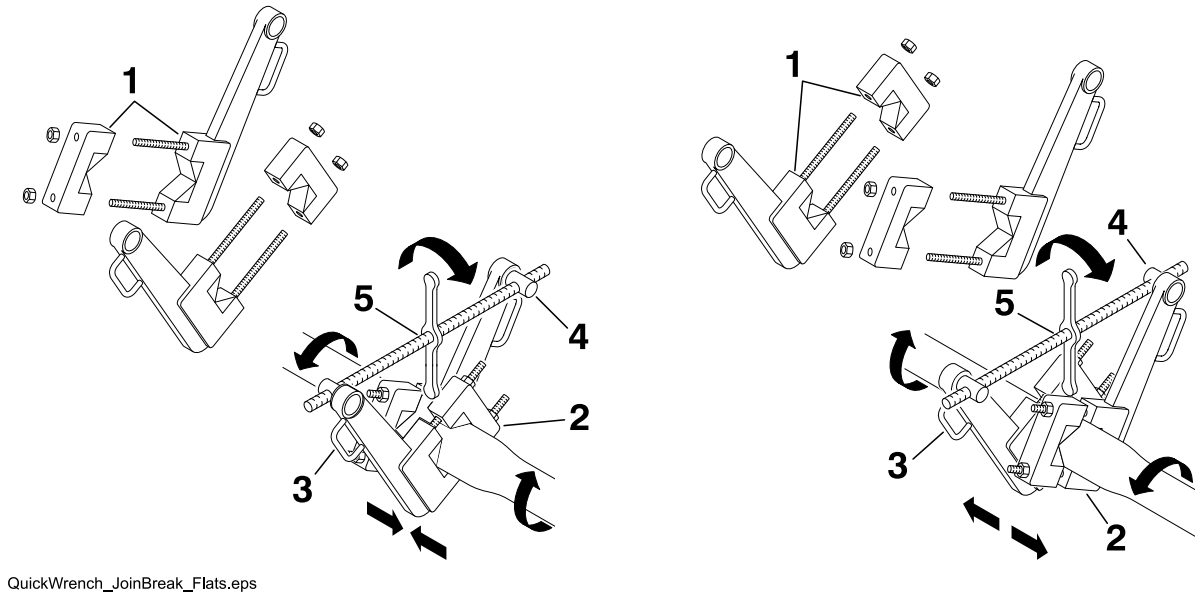

QuickWrench_JoinBreak_Flats.eps

Join **Break**

1. Shut off machine.
2. Unbolt vise (1) and place jaws around pipe.
3. Bolt jaws of vise together.
4. Place jaw (2) around pipe, transition sub, or downhole tool.
5. Pin handles (3) to wrench jaws. Ensure handles are both up.
6. Attach pivot nuts (4) to wrench handles so that screw drive handle (5) is over joint.

Join

1. Scribe straight line across joint on both sides of separating line (A).
2. To join, scribe second line (B) on movable side of joint in the opposite direction of tightening action. Refer to table for correct dimension.

Connection	Dimension
Transition sub to JT24 Power Pipe HD	1/4" (6.35 mm)
Transition sub to beacon housing	5/8" (15.88 mm)
Transition sub to #600 HDX pipe	1/4" (6.4 mm)

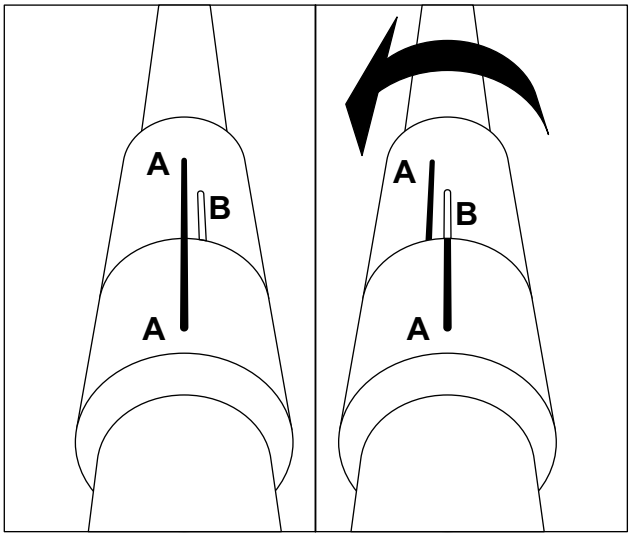

j07om071h.eps

Break

NOTICE: Ensure machine is shut off or tracker operator has disabled thrust and rotation.

1. Turn handle until joint is broken.
2. Turn handle opposite direction two turns to relieve pressure.
3. Remove quick wrench components.

Nozzles

Nozzles control fluid flow from the pipe to the bore. Select nozzles that will supply at least the amount of fluid per minute needed for the flow and pressure you will be using. A nozzle that will supply more fluid per minute is recommended. Contact your Ditch Witch dealer for nozzle recommendations.

Drill Pipe

Perform Regular Drill Pipe Care

Precondition New Pipe

NOTICE: Failure to follow this procedure could result in damaged or destroyed pipe.

IMPORTANT: Precondition new SaverLok body using this procedure.

Repeat this procedure three times for each piece of pipe before it is used the first time.

1. Hand lubricate entire surface of threads and shoulders of both ends of pipe with tool joint compound. See "Recommended Lubricants" on page 169.
2. Join pipe and tighten joint.
3. Break joint.
4. Move pipe back to box.

Lubricate Joints before Each Use

Lubricate threads and shoulders of male joints with tool joint compound. This prevents rust and reduces wear on shoulders and threads. See "Recommended Lubricants" on page 169.

Clean the Threads

Clean the threads as needed with high-pressure water and detergent.

NOTICE: Do not use gasoline or other petroleum-based solvents. This prevents tool joint compound from sticking to the joints and will reduce thread life.

Replace Worn SaverLok Body

NOTICE: Failure to replace SaverLok body will result in damaged drill pipe.

Because each pipe comes in contact with the SaverLok body, check SaverLok body regularly for wear. Compare condition of SaverLok body threads to condition of drill pipe threads. Replace SaverLok body any time when its thread condition is not better than thread condition of drill pipe. See "SaverLok" on page 195.

Use Drill Pipe Correctly

Align the Joints

Always carefully align the male and female ends of pipe before threading them together.

NOTICE:

- Poor alignment can damage the threads and destroy the usefulness of the joint.
- If joints get out of alignment during a bore, use frame tilt or rear stabilizers to adjust the machine.

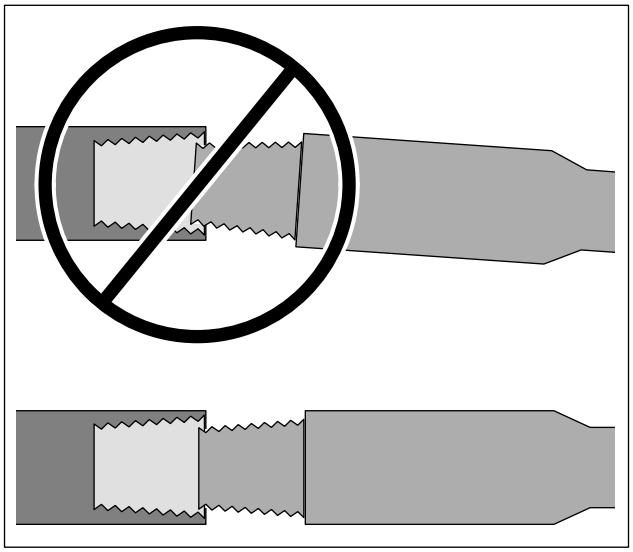

DrillPipe_Align.eps

Clamp Pipe Correctly

See "Clamp Pipe" on page 106.

Make Up and Break Out Joints Correctly

NOTICE: To prevent thread crossing, galling, and shoulder swelling:

- Make up and break out joints slowly.
- Do not ram pipes together during makeup or force them apart during breakout.
- Carefully match carriage travel speed to rotation speed, and always connect and disconnect joints slowly and deliberately.

Assisted Makeup

IMPORTANT: If assisted makeup is not functioning, machine will not thrust or rotate while carriage is on front or rear home with front wrench clamped.

Assisted makeup protects threads by automatically matching carriage movement speed to rotation during makeup and breakout.

- To connect pipes together and fully tighten joint, slowly rotate pipe until spindle stops turning and full pressure is developed. Improperly tightened joints will damage the shoulder faces and threads, and will cause joints to leak or break while drilling or backreaming.
- To disconnect pipes, slowly rotate spindle counterclockwise. Carriage will move back automatically as threads fully separate.

Do Not Overwork Pipe

NOTICE: Bending pipe more sharply than recommended will damage pipe and cause failure.

Do not exceed the bend radius for pipe. See "Recommended Bend Limits" on page 30. Do not oversteer.

Drilling Fluid

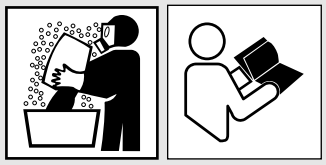

⚠ WARNING Chemicals. Improper handling or use can result in illness, injury, or equipment damage. Follow instructions on labels and in Safety Data Sheets (SDS).

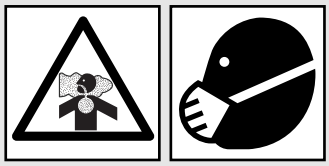

⚠ CAUTION Silica dust. Exposure can cause lung disease. Use breathing protection.

To help avoid injury:

- Use water spray or other means to control dust.
- Follow US Occupational Safety and Health Administration (OSHA) or other applicable regulating guidelines for appropriate breathing protection or dust control methods.

Recommended Products

For productive drilling and equipment protection, use these recommended products, available at your Ditch Witch dealer.

Product	Description
Bentonite	Forms a thin cake on bore walls, lubricating the bore and keeping it open and holding fluid
Premixed bentonite	Contains premixed bentonite, polymer, and soda ash
Polymer	Provides lubrication, increases viscosity in average soils and heavy clay, and reduces swelling that traps pipe in the bore in swelling clay
Wetting agent	Water soluble cleaning solution
Soda ash	Used to adjust pH of water and water hardness

Match drilling fluid to soil type. This chart is meant as a guideline only. Contact your Ditch Witch dealer or drilling fluid representative for drilling fluid recommendations and soil conditions in your area, or use the Fluid Formulator on www.ditchwitch.com.

Soil Type	Drilling Fluid Recommendation
Smooth, flowing sand	Bentonite or premixed bentonite + medium chain polymer
Coarse sand or light soil	Bentonite or premixed bentonite
Heavy or swelling clay	Long chain polymer + wetting agent
Rock	Premixed bentonite

Mixtures

Bentonite does not mix well in water containing polymer. To use both, mix bentonite first, then add polymer. When adding other products follow the order listed below.

IMPORTANT:

- If chemicals are added in the wrong order, they will not mix properly and will form clumps.
- If tank contains bentonite/polymer mix and more drilling fluid is needed, completely empty tank and start with fresh water before mixing another batch.

1. Soda ash
2. Bentonite
3. Polymer
4. Wetting agent

Some things to remember when mixing bentonite:

- Use clean water free of salt, calcium, or excessive chlorine.
- Use water with pH level between 9 and 10.
- Use water with hardness of less than 120 ppm.
- Do not use bentonite containing sand.
- Mix bentonite thoroughly or it will settle in tank.
- Do not mix bentonite to a funnel viscosity of over 50. See "Funnel Viscosity" on page 143.

Funnel Viscosity

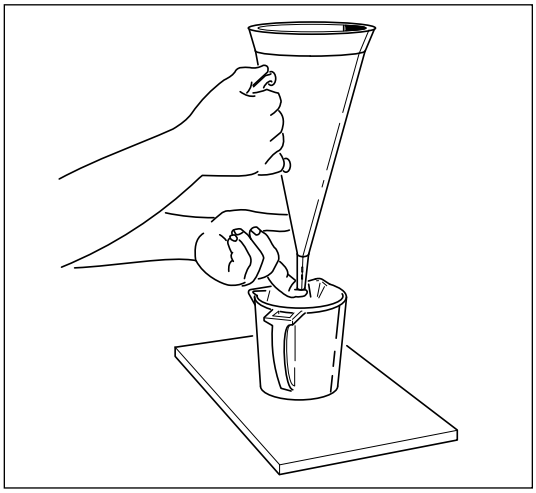
j07om033c.eps

Viscosity is the measure of internal resistance of a fluid to flow; the greater the resistance, the higher the viscosity. Viscosity of drilling fluids must be controlled. Contact your Ditch Witch dealer or drilling fluid representative for more information.

To determine viscosity, you will need a Marsh funnel (p/n 259-267) and a measuring cup, available from your Ditch Witch dealer.

IMPORTANT: Ensure Marsh funnel is clean and free of obstruction and that you have a stopwatch available for timing the viscosity.

1. Using a clean container, take a fresh sample of drilling fluid. The sample must be at least 1.5 qt (1.4 L).
2. With finger over bottom of funnel, fill with fluid from the container through the screen until fluid reaches the bottom of the screen.
3. Move funnel over 1 qt (0.95 L) container.
4. Remove finger from bottom of funnel and use the stopwatch to count the number of seconds it takes for 1 qt (0.95 L) of fluid to pass through the funnel. The number of seconds is the viscosity.
5. Thoroughly rinse measuring cup and Marsh funnel.

DrillLok System

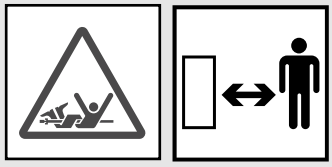

DANGER Rotating shaft. Crushing will cause death or serious injury. Stay away.

To help avoid injury:

- Use DrillLok system every time downhole tools are changed or during other times when the drill string is exposed.
- If you are not using a DrillLok system, turn off machine and keep key in tracker operator's possession before changing downhole tools.

IMPORTANT:

- See "DrillLok key" on page 86.
- This mode does not disable thrust and rotation immediately. Functions are disabled within 16 seconds.
- Tracker operator cannot disable thrust and rotation from tracker if DrillLok key is installed in machine and turned to the deactivated position.

This mode allows the tracker operator to disable hydraulic power to machine thrust and rotation. DrillLok indicator (shown), located on front of machine, will light when thrust and rotation have been disabled by DrillLok system.

If operating with Subsite Electronics tracking equipment, DrillLok system will be incorporated into tracker. See tracker operator's manual.

If operating without Subsite Electronics tracking equipment, DrillLok system will be a separate handheld device. See DrillLok operation sheet.

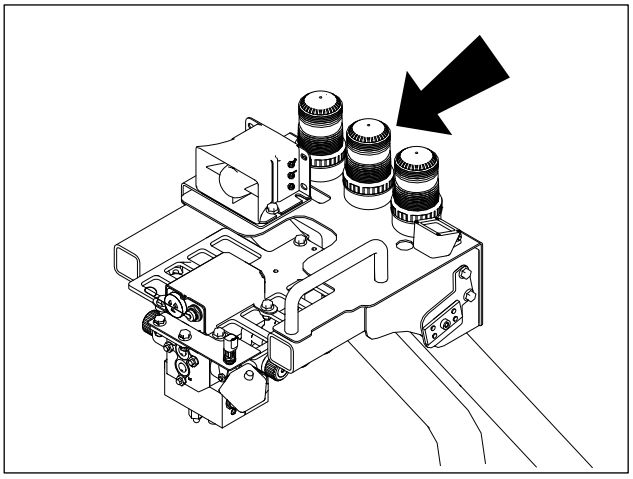

j79om021h19.eps

Electric Strike System

NOTICE: The strike system does not prevent electric strike or detect strikes before they occur. **If alarms are activated, a strike has already occurred** and equipment is electrified.

Electric strike system must be properly set up, tested, and used any time jobsite is classified as electric.

See "Apply Precautions" on page 27. Review safety procedures before each job.

If an electric strike occurs, immediately contact your local Ditch Witch dealer to have the electric strike system tested.

Assemble Voltage Detector

1. Drive voltage stake into ground at least 6' (2 m) away from any part of system and behind drill frame.
2. Clip voltage limiter to voltage stake as shown.

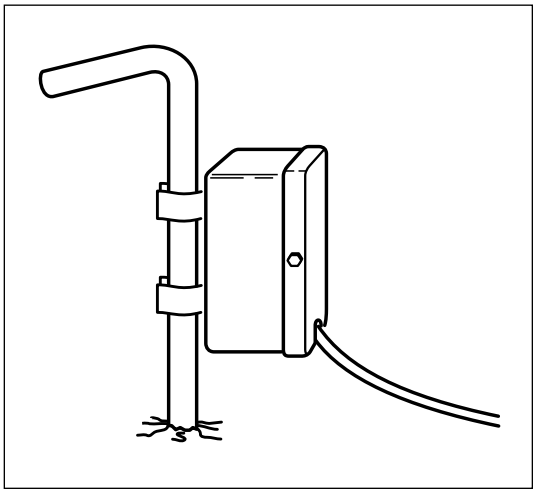

j07om021c.eps

Test Strike System

If component fails any part of this system test, see "Troubleshoot Strike System" on page 146. Do not drill until system test is completed successfully.

1. Start engine.
2. Test alarms and strobe. See page 52.
3. View test results and historical data stored in the display. This data includes:
   - ESID bar graph
   - alphanumeric readout showing volts and amps
   - current diagnostic codes, or diagnostic codes detected during previous tests
4. Use Electric Strike Simulator to test voltage and current sensors. See page 148.

Troubleshoot Strike System

When strike system detects a problem, a diagnostic code will be displayed. If this happens, press manual-test button to retest. If an error code is still displayed and does not appear in this chart, have control module checked or replaced.

Other problem situations and their possible causes and solutions are listed in the chart below.

Problem	Possible Cause	Possible Solution
No communication with ESID. Red icon shown in upper display. 	Problems in startup	Select test function from ESID menu. If problem goes away, retest strike system.
	No power to strike system control module	Check machine electrical system. Ensure harness from machine to control module is connected.
	Defective control module	Have control module checked or replaced.
	Defective CAN bus connection	Ensure CAN cable from machine to ESID control module is connected.
SPN521513 FMI31 DID224 shows on display	Test wire not connected	Ensure test wire is connected to ESID control module. Ensure test wire is connected to display. Have ESID control module checked or replaced.

Problem	Possible Cause	Possible Solution
Strobe light on machine does not work during system test	Improper connections with control module	Check connections and wiring harness.
	Defective strobe light	Disconnect strobe and connect to external 12V power source. If strobe still does not work, replace.
	Defective control module	Have control module checked or replaced.
Alarm on machine does not work during system test	Improper connections with control module	Check connections and wiring harness.
	Defective alarm	Disconnect alarm and connect to external 12 DC power source. If alarm still does not work, replace.
	Defective control module	Have control module checked or replaced.
SPN523518 FMI31 DID224 and red ESID current indicator shows on display 	Improper connections with control module	Check cable connections on control module and current transformer.
	Defective current transformer	Disconnect current transformer. Check for 20-40 ohms from pin 1 to pin 4 and from pin 1 to pin 2, and less than 1 ohm from pin 2 to pin 4.
	Defective current transformer cable	Disconnect cable from transformer and control module and check continuity of cable. If continuity is zero or cable is damaged, replace.
	Defective control module	Have control module checked or replaced.
Red ESID voltage indicator shows on display 	Improper connection of voltage limiter to ground stake	Check voltage limiter connection to ground stake and verify that ground stake is driven properly.
	Improper connections with control module	Check cable connection on control module.
	Defective voltage limiter	Have voltage limiter checked or replaced.
	Defective control module	Have control module checked or replaced.

Use Electric Strike Simulator

Use the Electric Strike Simulator (p/n 220-1275) to test voltage and current sensors on ESID. If readings are less than indicated here, replace battery in simulator and retest. If readings are still less than indicated, contact your Ditch Witch dealer to have ESID repaired before drilling.

Current Test

To test for current at normal levels:

1. Thread one lead wire through current transformer.
2. Clip ends of lead wires together to make one loop.
3. Select ESID menu on upper display.
4. Move simulator switch to "current" and press test button.
5. Watch display on upper display.
   - ESID bar graph should show 1/2 scale on display.
   - ESID % and current "AMPS" should show 30% or higher in display.

To test for current at strike levels:

1. Thread two or three loops through current transformer.
2. Follow steps above to test.
3. Display should show the following:

   With two loops:

   - Current "AMPS" should be 80% or higher.
   - Strike indication might go on and off.

   With three loops:

   - Current "AMPS" should be 130% or higher.
   - Strike indication should be continuous.

Voltage Test

1. Place voltage limiter on something insulated from ground and machine (such as dry board or tire), but near frame of machine.
2. Clip one lead to frame.
3. Clip other lead to one voltage limiter mount.
4. Move simulator switch to "Voltage" and press test button.
5. Display should show the following:
    - ESID % and voltage "VOLTS" should show 90% or higher.
    - Alarm and strobe should turn on.

It is normal for simulator voltage levels to drift below strike level. When this happens, ESID bar should show less than full and alarm and strobe should stop working. If the level drifts above strike level again light, ESID bar, and strobe should be turned on again.

Pipe Loader

Add/Remove Single Pipe

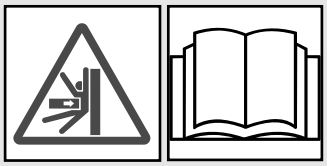

WARNING Horizontal movement. Crushing can cause death or serious injury. Read and understand operator's manual and all safety instructions before use.

To help avoid injury:

- Never attempt to move shuttles until everyone is at least 10' (3 m) away from machine.
- Ensure switch operator is standing clear of all moving parts while adding pipe.



WARNING Misuse of machine can cause death or serious injury. Read and understand operator's manual and all other safety instructions before use. Know how to use all controls.

To help avoid injury:

- Use auxiliary pipe loading controls to add/remove single pipe. See "Auxiliary Pipe Loading" on page 46.
- Open or close both auxiliary pipe loaders.
- Carriage must be in full back position to load and unload pipe.
- Always use provided pipe guide.
- Drill pipe is heavy. Have enough people on hand to manually add or remove single pipe to pipe box.



WARNING Underground utilities. Contact can cause death or serious injury. Locate and verify underground utilities before digging or drilling.

To help avoid injury:

- Never attempt to load and unload pipe while drilling or backreaming.
- On electrical jobsite, load and unload pipe only if loader is wearing electrically insulating boots and gloves.

Load a single pipe or up to a whole row of pipe into last row of pipe box to finish bore without changing pipe boxes. Pipe can be added as soon as last row of pipe has been started and other rows are empty. Unload added drill pipe with auxiliary pipe loaders once bore is finished. Pipe in last row of pipe box can be unloaded only when other rows are empty.

1. Select last row.
2. Override drill operator control of shuttles and pipe lifters.
3. Lower shuttle covers (2).
4. Lower pipe lifter covers (1).
5. Extend shuttles fully.

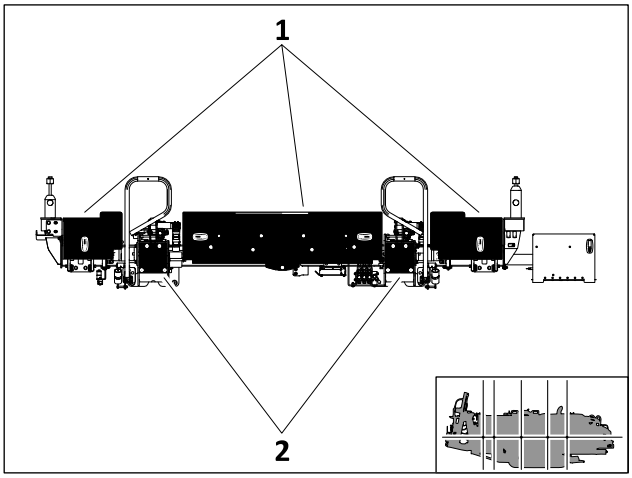

j79om022h19.eps

6. Rotate auxiliary pipe loaders into position as shown.

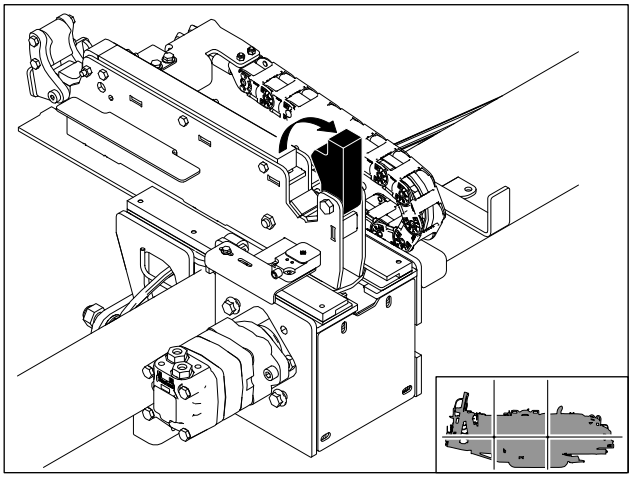
j79om023h19.eps

7. Remove pipe guide (stored on shuttle drive cover) and attach to front of pipe loader frame as shown.

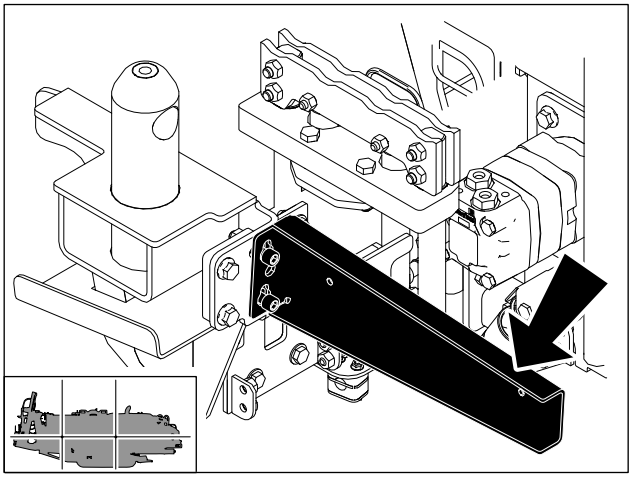
j79om024h19.eps

Add Pipe	Remove Pipe
• Load single pipe in auxiliary pipe loader and rest against pipe guide. • Move auxiliary pipe loaders under last row. • Raise pipe lifters. • Extend shuttles. • Repeat if more than one pipe is needed. • Lower pipe lifters.	• Raise pipe in last row. • Retract shuttles. • Lower pipe lifters. • Extend shuttles. • Remove pipe from auxiliary pipe loaders and store properly. • Repeat if more than one pipe was added.

8. Close both auxiliary pipe loaders.
9. Remove pipe guide and store on shuttle drive cover.
10. Replace covers.
11. Enable drill operator controls of shuttles and pipe lifters.
12. Step away from machine.

Correct Dropped Pipe

To return a dropped pipe to the drill string, shut off machine and manually retrieve pipe. Return it to pipe box by loading as a single piece of pipe. See "Add/Remove Single Pipe" on page 150.

Correct Misaligned or Jammed Pipe

A pop-up message on the display will indicate a misaligned or jammed pipe. Turn engine off and inspect pipe in active row. If drill pipe is bent, remove from pipe box and discard.

NOTICE: If misaligned or jammed pipe cannot be corrected by removing bent pipe, contact your Ditch Witch dealer for assistance.

Remove/Install Pipe Box

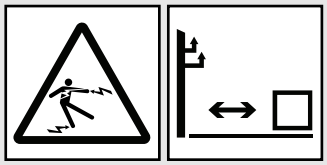

DANGER Overhead electrical lines. Contact will cause death or serious injury. Know location of lines. Stay away.

To help avoid injury: Follow US Occupational Safety and Health Administration (OSHA) guidelines for working around overhead electrical lines.

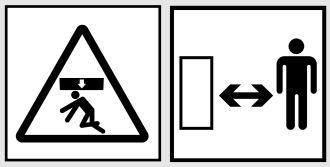

WARNING Lifted load. Crushing can cause death or serious injury. Stay away from lifted load and its range of movement.

To help avoid injury:

- Always walk around machine and check for obstructions before moving load.
- Use equipment capable of supporting the equipment's size and weight. See "Specifications" on page 201 or measure and weigh equipment before lifting.
- Never remove pins from ends of pipe box until lifting device is attached. Box may fall if pipe lift switch is pressed without end pins in place.
- Lift only one box of pipe at a time.
- Never take your eyes off moving load. Always look in the direction load is moving.
- Never swing a load over people.

Prepare

1. Raise pipe and remove pins (1) and support bars (2) from pipe box storage pockets.
2. Insert each support bar into opening and retain with pin through tab.
3. Lower pipe.

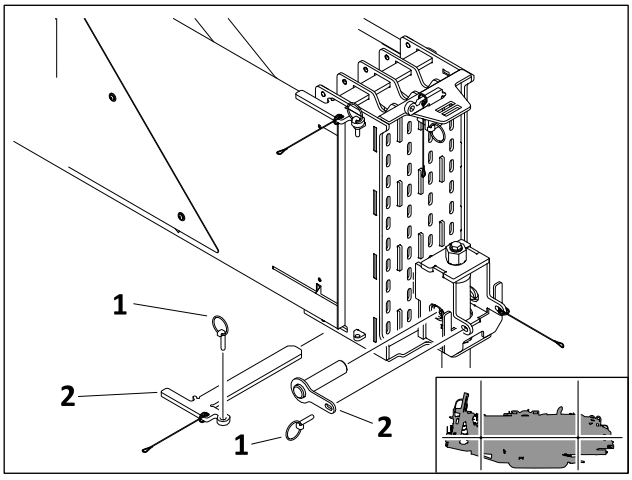

j79om025h19.eps

Remove Pipe Box

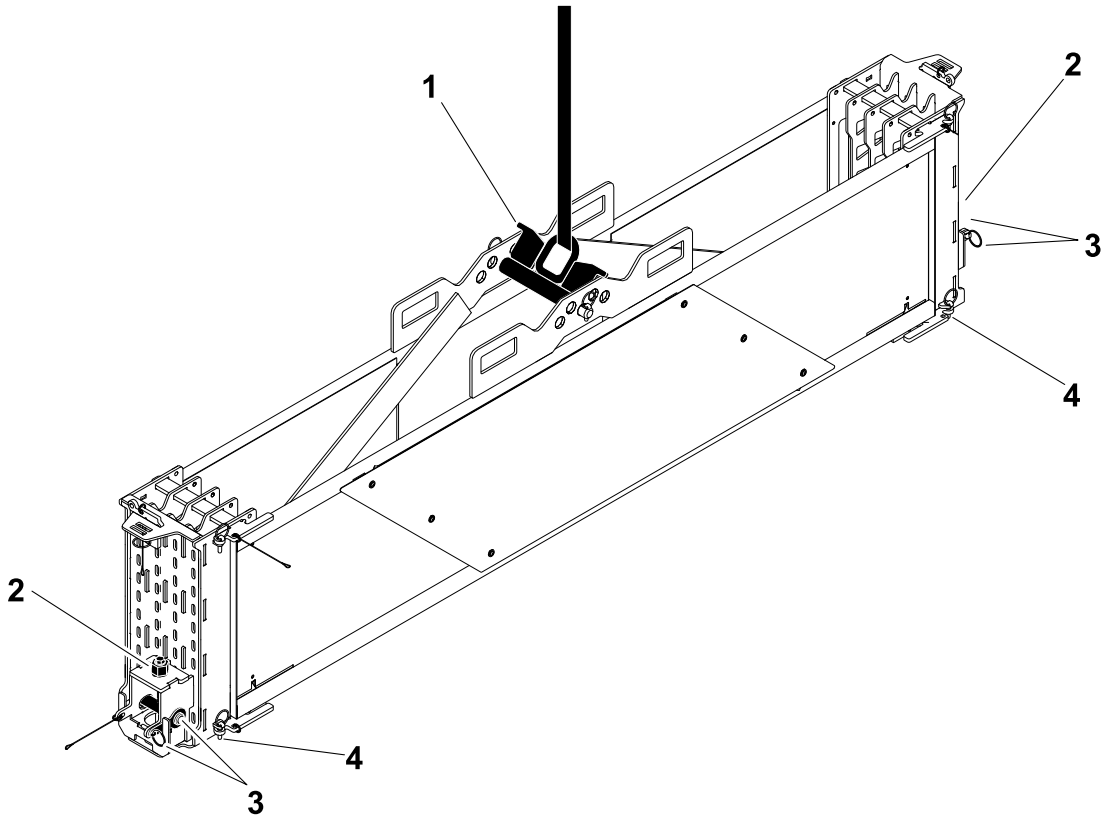

j79om026h19.eps

1. Install lift block (1) and secure with lift block support bar and pins. Adjust to match drill frame angle.
2. Install bottom support pins (4) on both ends of pipe box.
3. Remove threaded caps (2) from pins.
4. Remove pins (3).
5. Move pipe box off of drill frame.

Install Pipe Box

NOTICE: Pipe box should only be installed onto pipe loader when shuttle is in first row position.

1. Move pipe box over front and rear locating pins and lower into position. Ensure pipe box is moved all the way to the front.
2. Install threaded caps onto pins.
3. Install pins.
4. Raise pipe lifters.
5. Remove bottom support pins from both ends of pipe box. Store support pins in pipe box storage pockets.

Rotate Drill Pipe Order

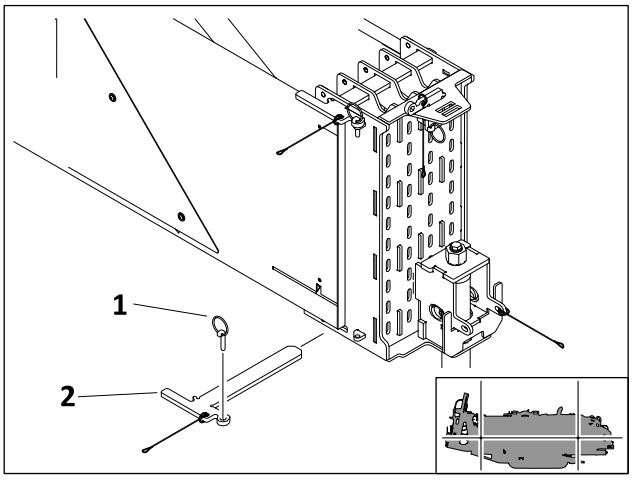

j79om071h19.eps

Rotating the drill pipe is a manual process. Rotate drill pipes in the drill string weekly. Rotate only as many rows as used on the longest bore of the week. For example, if the longest bore was 200' (61m), then only rotate two rows used.

Procedure

1. Remove pipe retainers (2) from stowed position.
2. Raise pipe lifters until pipe retainer slot is free of obstruction.
3. Insert pipe retainers into slot on front and rear of pipe box on first row of pipe.
4. Secure pipe retainer with pin (1).
5. Adjust row stop to second row of pipe.
6. Operate drill until desired row(s) of pipe remain.
7. Set row stop to first row.
8. Raise pipe lifters to take weight off of pipe retainers.
9. Remove pipe retainers and secure in stowed position.
10. Operate drill until pipe box is empty.
11. Fill box using normal operating procedures.

Row Select

NOTICE:

- Do not raise pipe lifters with too many pipes in a row.
- Shuttle must be extended from under pipe box when row is selected.

Drilling

Change row when row is empty. If automated pipe loader is being used, display will indicate that it is time to select a new row. Use row select buttons to select a new row.

Backreaming

Select next row when active row is full.

Sensor Override

Automated functions of this machine are made possible by information collected from many sensors on the machine. Sensor override mode permits limited operation without automated functions and standard equipment protections when an issue is detected with one or more of the sensors. In sensor override mode, an operator can complete a bore and move the machine away from the jobsite so that proper repairs can be made at a Ditch Witch dealership.

NOTICE: Some automated functions that can protect components from damage are NOT available in sensor override mode. Use extreme caution when operating in sensor override mode.

IMPORTANT: Only qualified Ditch Witch service technicians can return machine to normal operation.

If a sensor affected by the sensor override mode has an error and needs attention, a pop-up message will appear on display. Each pop-up message will give the operator the option to override the error. The table below details how automated functions are affected in sensor override mode.

Pop-Up Message	With Override	Without Override	Cause
Automatic row stop	Pipe loader automation and automatic row change disabled Row stop will stay in current position Row must be changed by manually repositioning row stop	Shuttle will not move Row stop will stay in current position	Row select sensor reads out of range Row select motor pulling too much or too little current Row select sensor not detecting movement when row select should be moving
Carriage sensor	Two-speed carriage control, pipe loader automation, and distance drilled disabled	Carriage unable to move and shuttles unable to extend from under pipe box	No CAN communications Sensor shows carriage is beyond front or rear stop Sensor does not detect movements when carriage should be moving

Pop-Up Message	With Override	Without Override	Cause
Rotation pressure sensor	Rotation, SaverLok attach pressure limiting not active Excessive torque could damage components Rotation pressure reading on display not available Pressure in counterclockwise direction not limited during carve	Rotation unable to move	One or both rotation pressure sensors disconnected or reading out of range Rotation pressure sensor reading pressure when no pressure should be present
Rotation pump control sensor	Rotation operates without rotation pump control sensor Rotation control will be less precise Rotation speed varies with pressure more than normal	Rotation unable to move	One or both rotation pump control sensors disconnected or reading out of range Rotation pump control sensor not reading centered when pump not in operation
Thrust pressure sensor	Thrust pressure limiting not active Excessive thrust could damage components Thrust pressure reading on display not available	Carriage unable to move	One or both thrust pressure sensors disconnected or reading out of range Thrust pressure sensor reading pressure when no pressure should be present
Thrust pump control sensor	Thrust operates without thrust pump control sensor Thrust control less precise Thrust speed varies with pressure more than normal	Carriage unable to move	One or both thrust pump control sensors disconnected or reading out of range Thrust pump control sensor not reading centered when pump not in operation

Wireless Remote Control

Set-Up

1. Check wireless remote control battery status. Replace batteries if needed. See "Battery, Wireless Remote Control" on page 179.
2. Ensure USB key (shown) is installed. This key is a lock-out feature to prevent unauthorized use.

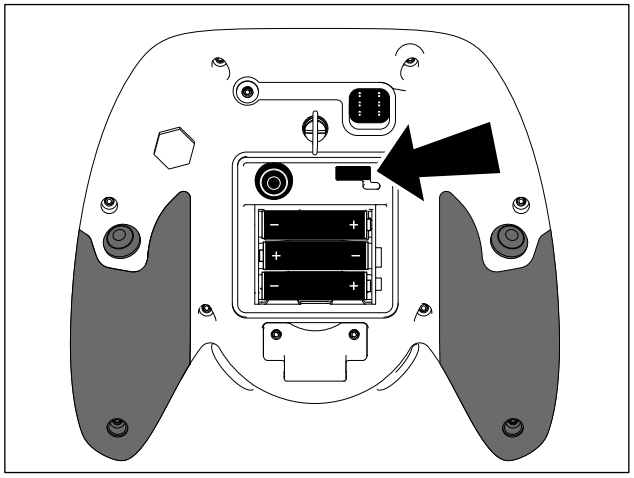

Remote_USB.eps

Operation

EMERGENCY STOP: Press engine stop on wireless remote or machine.




CAUTION Remote-controlled equipment. Impact can cause death or serious injury. Stay away.

To help avoid injury:

- Never drive while on machine.
- Keep machine in sight at all times when using wireless remote control.
- Keep a safe distance away from machine when operating wireless remote control.
- Ensure bystanders are not near the area where machine will be driven.
- Remove strap from around neck when using wireless remote control near moving parts.

NOTICE: Place wireless remote control in storage box after use. Take care not to store with neck strap on top of switches.

IMPORTANT: Operator station must be empty to operate wireless ground drive control.

1. Turn on wireless remote control. Wireless remote control indicator will light.

   IMPORTANT: Wireless remote control will shut down after one minute of inactivity. Move power/start/horn switch up to restart.

2. Select mode.
3. Operate.
4. Turn wireless remote control off when job is complete.

Troubleshooting

NOTICE: If machine does not respond as expected when using wireless ground drive, turn transmitter off and use alternate ground drive controls.

If communication link indicator is flashing yellow, communication between wireless remote control and machine has stopped. Move wireless remote control closer to machine while maintaining a safe distance. If in an area with interference, try changing the channel (see below).

If communication link indicator is red, communication has been lost. Shut down wireless remote control and restart enable communication. If remote still will not work, contact your Ditch Witch dealer.

If battery and communication link indicators both display red for several seconds and then the wireless control shuts off, USB key is not installed.

To change channel:

1. Activate accessories.
2. Connect harness (shown) to transmitter (2).
3. Ensure battery indicator is solid green.

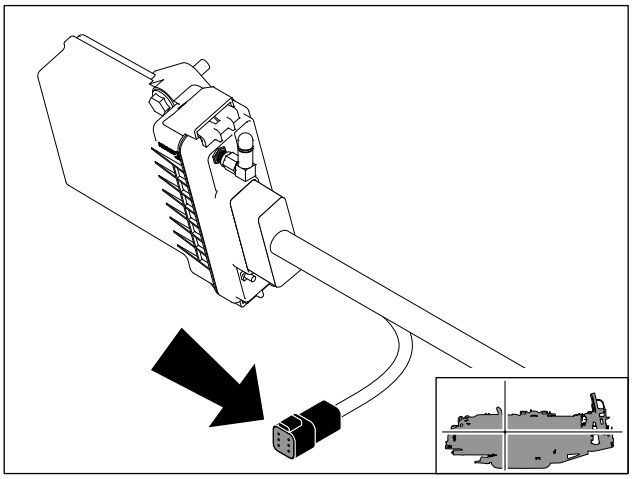
j79om027h19.eps

4. Press channel switch (1) until communication link indicator begins to flash green/yellow and then release the channel switch.
   - Rapid flashing green indicator signals successful channel connection.
   - Flashing yellow indicator signals unsuccessful channel connection.

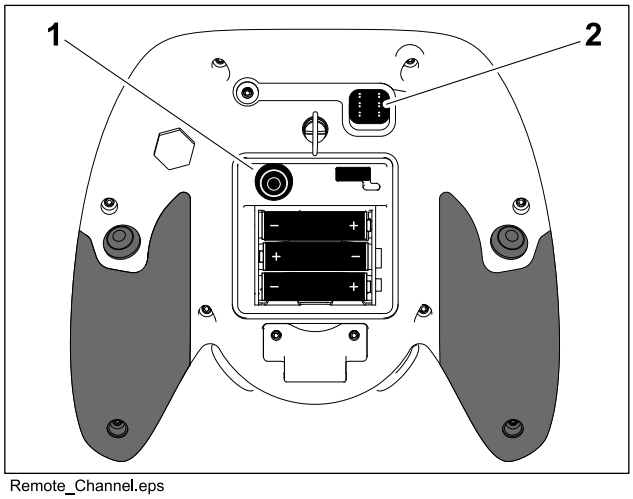

Remote_Channel.eps

Complete the Job

Chapter Contents



For additional precautions, see "Safety" and "Prepare" chapters.

Antifreeze Machine 162

- Add Antifreeze 162
- Reclaim Antifreeze 162

Rinse Equipment 163

Disconnect 164

Stow Tools 164

Store Machine 164

- Store Long Term. 164

Decommission Machine 164

Antifreeze Machine

This machine can be left overnight in freezing conditions by filling fluid lines with a polypropylene glycol-based, RV antifreeze with optional antifreeze system before shutdown.

Add Antifreeze

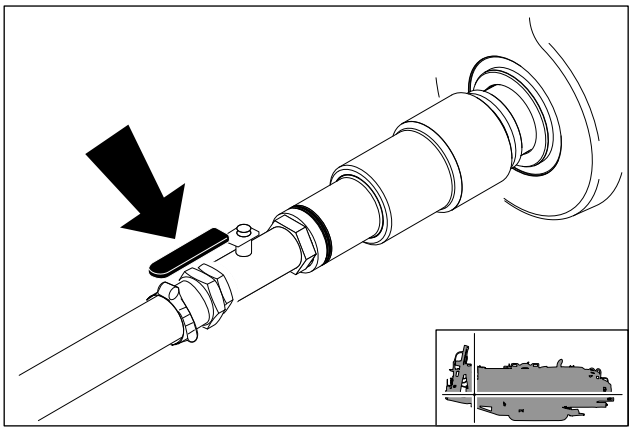
j79om028h19.eps

1. Add antifreeze to antifreeze tank. See "Specifications" on page 201.
2. Install plug on suction side of drilling fluid pump.
3. Open valve below antifreeze tank.
4. Install optional antifreeze reclaimer adapter in spindle.
5. Ensure valve is open as shown.
6. Start engine and set to low throttle.
7. Enable drilling fluid control.
8. Slowly turn drilling fluid control until antifreeze comes out of spindle.
9. Disable drilling fluid control.

Reclaim Antifreeze

IMPORTANT: Antifreeze can be removed from antifreeze tank and disposed of properly or it can be reused until it is too diluted with drilling fluid to protect against freezing.

1. Hold hose on optional antifreeze reclaimer over top of antifreeze tank.
2. Open valve on reclaimer.
3. Connect drilling fluid transfer hose from tank to drilling fluid pump inlet.
4. Close valve below antifreeze tank.
5. Start engine.
6. Set throttle to low.
7. Enable drilling fluid control.
8. Set drilling fluid control to low.
9. Turn drilling fluid off when drilling fluid comes out of reclaimer hose.
10. Remove antifreeze reclaimer.

Rinse Equipment



WARNING Pressurized fluid or air. Contact can cause death or serious injury. Refer to operator's manual for correct use.

To help avoid injury:

- Never use high flow when using wash wand.
- Never point or aim wand at yourself or anyone else. Keep nozzle low to the ground.
- Prime drilling fluid pump before operating wash wand. Failure to prime drilling fluid pump will cause flow fluctuations, which will make it difficult to control the wash wand.

NOTICE:

- Do not spray water onto operator console or electrical center in engine compartment. Water can damage electrical components. Wipe down instead.
- Ensure all mud and debris is rinsed from tracks before parking machine overnight.

1. Turn fluid flow to low.
2. Connect wash wand at quick connect (1) at rear of machine.
3. Press wash wand switch (2) to close discharge valve.
4. Check surroundings before pressing handle to start pressurized fluid flow.
5. Spray water onto equipment to remove dirt and mud. Some pressure might be needed to remove dried mud from wrench area. Thoroughly rinse operator station and step.

   IMPORTANT: If front wrench is clamped, fluid will not flow to the wash wand.

6. Release handle to stop flow.

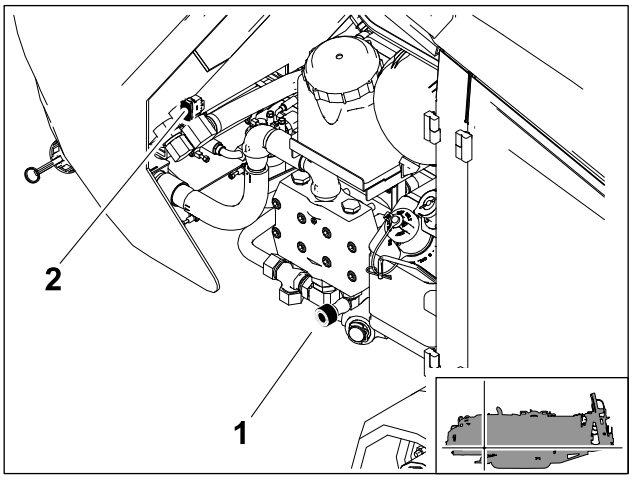

j79om029h19.eps

Disconnect

Disconnect and store the following hoses and cables (if used):

- electric strike system voltage stake
- fluid hose

Stow Tools

Ensure all quick wrenches, bits, pullback devices, and other tools are loaded and properly secured on trailer or truck.

Store Machine

Before storing, ensure machine is rinsed, equipment is stowed, and all fluids are filled. For more information on filling fluids, see Maintenance chapter or contact your Ditch Witch dealer.

Store Long-Term

To store machine for periods of time exceeding two months:

- Ensure exposed parts are treated with anti-rust agent.
- Touch up paint as needed to prevent rusting.
- Lubricate machine and apply grease to unpainted surfaces.
- Cover exhaust pipe.

Decommission Machine

Before decommissioning machine, follow local regulations for disposing of hazardous substances. For more information on draining fluids, see Maintenance chapter or contact your Ditch Witch dealer.

Maintenance

Chapter Contents



For additional precautions, see "Safety" and "Prepare" chapters.

Maintenance Precautions 166

- Welding Precaution 167
- Washing Precaution 167
- Working under Machine 168

Recommended Lubricants 169

- Engine Oil Temperature Chart 170
- Approved Coolant 170
- Approved Fuel 171
- Diesel Exhaust Fluid 172
- Exhaust Cleaning 173

Maintenance Interval Chart 174

Procedures 176

Maintenance Precautions



⚠WARNING Jobsite hazards. Exposure can cause death or serious injury. Use correct equipment and work methods. Use and maintain appropriate safety equipment.

To help avoid injury:

- Wear personal protective equipment including hard hat, safety eye wear, foot protection, hearing protection, and gloves (except when near rotating equipment).
- Remove jewelry.
- Wear close-fitting, high visibility clothing.
- Have other personal protective equipment, such as insulated boots and gloves, breathing protection, and face shield, etc. available for use depending on jobsite hazards or requirements.



⚠WARNING Misuse of machine can cause death or serious injury. Read and understand operator's manual and all other safety instructions before use. Know how to use all controls.

To help avoid injury:

- Unless otherwise instructed, all maintenance should be performed with the engine off and cool.
- Lower unsecured, raised components before servicing equipment.
- Unless otherwise instructed, all maintenance should be performed with machine parked on level surface.
- Refer to US Occupational Safety and Health Administration (OSHA) guidelines for appropriate lockout-tagout procedures.

Welding Precaution

NOTICE: Welding can damage electronics.

- Welding currents can damage electronic components. Always disconnect the ECU ground connection from the frame, harness connections to the ECU, and other electronic components prior to welding on machine or attachments.
- Connect welder ground close to welding point and make sure no electronic components are in the ground path.
- Disconnect battery at battery disconnect switch before welding to prevent damage to battery. See "Battery" on page 176.
- Never turn off battery disconnect switch with engine running, or alternator and other electronic equipment devices may be damaged.

Washing Precaution

NOTICE: Water can damage electronics. When cleaning equipment, do not spray electrical components with water.

Working under Machine

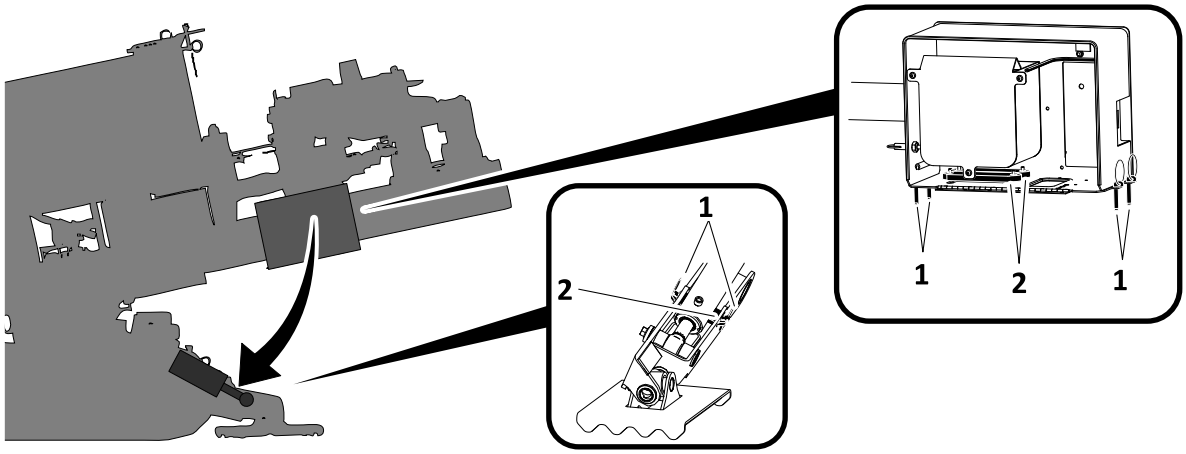

j79om030h19.eps

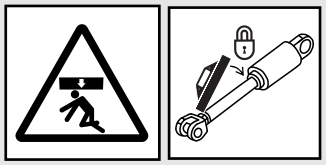

WARNING Raised component. Crushing can cause death or serious injury. Stay away or secure raised component with locking device. Use correct equipment and procedures.

Before working under area of machine supported by stabilizer or frame tilt cylinder, ensure machine is parked on hard surface.

1. Lower stabilizers fully.
2. Remove stabilizer locks (1) from storage in controller box and place in slots on stabilizers.
3. Install spring pins (2).
4. Lower machine until load is supported by stabilizer locks.

Recommended Lubricants

Item	Description
DEAC	Diesel engine antifreeze/coolant meeting CES 14603 See "Approved Coolant" on page 170.
DEF	Diesel exhaust fluid meeting ISO 22241-1 or DIN 70070
DEO	Diesel engine oil meeting or exceeding Cummins® 20081, API CJ-4, ACEA E9. See "Engine Oil Temperature Chart" on page 170. Do not use API FA-4. API American Petroleum Institute, ACEA European Automobile Manufacturer's Association
EPS	Extreme pressure spray lubricant, Lubriplate LO152-063 or equivalent
MPG	Multipurpose grease, polyurea based NLGI GC-LB Grade 1.5 or lithium based NLGI GC-LB Grade 2
MPL	Multipurpose gear oil meeting API GL-5 (SAE80W90)
PF	Phillips 66® PowerDrive® Fluid 30
THF	Tractor hydraulic fluid, Phillips 66® PowerTran XP Fluid or equivalent
TJC	Tool joint compound, Ditch Witch standard or environmental
WRG	Mulitpurpose extreme pressure water resistant grease, polyurea based NLGI GC-LB Grade 2

Proper lubrication and maintenance protects Ditch Witch equipment from damage and failure. Service intervals listed are for minimum requirements. In extreme conditions, service machine more frequently. Use only genuine Ditch Witch parts, filters, approved lubricants, TJC, and approved coolants to maintain warranty. Fill to capacities listed in "Specifications" on page 201.

For more information on engine lubrication and maintenance, see the engine manual.

Engine Oil Temperature Chart

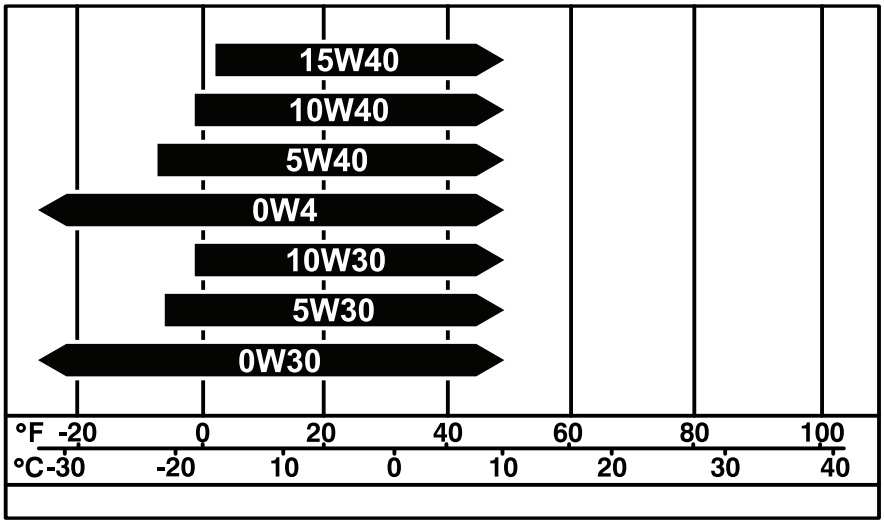

j79om064h19.eps

Temperature range anticipated before next oil change

Approved Coolant

NOTICE:

- Use only pre-diluted coolant or concentrated coolant mixed with distilled water. Do not use tap water.
- Using water or high-silicate automotive-type coolant will lead to engine damage or premature engine failure.
- Mixing heavy-duty diesel engine coolant and automotive-type coolants will lead to coolant breakdown and engine damage.

This machine was filled with coolant meeting Cummins CES 14603 (blue in color) before shipment from factory. Add or replace only with coolant meeting this specification. Coolant meeting this specification is available, pre-diluted, from your Ditch Witch dealer as part number 255-1055.

Approved Fuel

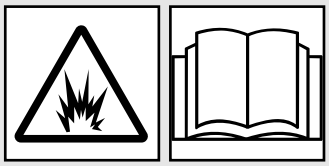

⚠ WARNING Ultra Low Sulfur Diesel (ULSD) poses a greater static ignition hazard than earlier diesel formulations with higher sulfur content. Avoid death or serious injury from fire or explosion; consult with your fuel or fuel system supplier to ensure the delivery system is in compliance with fueling standards for proper grounding and bonding practices.

This engine is designed to run on diesel fuel. Use only high quality fuel meeting ASTM D975 No. 2D, EN590, or equivalent. At temperatures below 32°F (0°C) winter fuel blends are acceptable. See the engine manual for more information.

NOTICE: Use only Ultra Low Sulfur Diesel (less than 15 ppm sulfur content in the US and Canada or 10 mg/kg in EU and Japan) in this machine. Operating with higher sulfur content will damage the engine and aftertreatment device.

Biodiesel blends up to 5% (B5) are approved for use in this machine. The fuel must meet the specifications for diesel fuel shown above. In certain markets, higher blends may be used if certain steps are taken. Extra attention is needed when using biodiesel, especially when operating in cold weather or storing fuel. Contact your Ditch Witch dealer or the engine manufacturer for more information.

Diesel Exhaust Fluid (DEF)



⚠ CAUTION Corrosive fluid. Contact can cause death or serious injury. Avoid contact. Wear appropriate gloves. See Safety Data Sheet (SDS) for more information.

To help avoid injury:

- If spill occurs, wipe clean immediately.
- If skin contact occurs, rinse with water immediately.
- If eye contact occurs, seek medical help immediately.
- If ingested, seek medical help immediately.

NOTICE: Shut off machine before adding DEF.

This engine requires diesel exhaust fluid (DEF) to meet emission regulations. Use only high quality DEF meeting ISO 22241-1 or DIN 70070 requirements. Running this engine without DEF will increase exhaust emissions and cause engine to derate. Do not dilute or contaminate DEF or substitute other fluids. Tampering with the DEF system will increase exhaust emissions and cause the engine to derate.

DEF has other common names such as Urea, AUS 32, AdBlue, NOx Reduction Agent, and Catalyst Solution.

DEF freezes at 11.3°F (-11.5°C) but the system is designed to prevent freezing during normal operation. If DEF freezes in the tank when the engine is shut down, the system will quickly thaw DEF when engine is started.

DEF has a limited shelf life. In ideal conditions, maximum expected shelf life is about 18 months. At temperatures higher than 90°F (32°C), DEF will degrade more rapidly. Do not store in direct sunlight.

Storage and transfer equipment must be compatible with DEF. Most materials (especially hoses) are not compatible and will degrade and contaminate DEF. Do not use contaminated DEF. Containers made of polyethylene or polypropylene are recommended.

This machine will consume DEF at a rate between 2 and 3% of diesel consumption. Many factors affect consumption rate, but a good rule of thumb is to fill the DEF tank every other time the diesel tank is filled.

Exhaust Cleaning

This engine has a Selective Catalytic Reduction (SCR) system that uses a small amount of DEF to convert NOx emissions in the exhaust into nitrogen and water. The SCR system cleans itself automatically, unless it is manually disabled by the operator.

Automatic exhaust cleaning happens during normal machine operation when sensors in the engine determine the need. During an engine exhaust cleaning cycle, engine exhaust can reach high temperatures. When this happens, the high exhaust temperature icon will light.



If the jobsite is in an area where high exhaust temperature might cause a problem, disable exhaust cleaning (see page 84) for the duration of the job and return to automatic cleaning when the job is finished. The exhaust cleaning disabled icon will light and remain on until the system is returned to automatic cleaning mode.



The exhaust cleaning icon will light when the system is disabled and exhaust cleaning cycle is needed.



- The icon will light when an automatic cleaning is needed. If the area will allow it, return the machine to automatic cleaning mode and let it run automatically.
- The icon will flash when a manual cleaning is needed. Set the engine to low throttle with no load and initiate the manual exhaust cleaning cycle. The light will continue to flash until the manual exhaust cleaning cycle is finished (approximately 30 minutes).
- A manual exhaust cleaning cycle is required after automatic exhaust cleaning has been disabled multiple times. If manual cleaning is not done when indicated, the engine will derate.

Maintenance Interval Chart

IMPORTANT: Chart indicates first instance of repeated maintenance procedures. See detailed information below.

▽	Adjust, service, or test	□	Change, initial	○	Lube, initial
▲	Check	■	Change	●	Lube

Service	Startup	10 Hours	50 Hours	250 Hours	500 Hours	1000 Hours	2000 Hours	4000 Hours	As Needed
Battery		▲							▽
Battery, wireless remote control									■
Belt, engine drive			▲						■
Coolant	▲	▲					■		
Drilling fluid y-strainer	▲	▲							
Dust ejector valve	▲	▲							
Engine compartment			▲						
Filter, air									■
Filter, DEF tank						■			
Filter, DEF pump								■	
Filter, engine oil (see Oil, engine)									
Filter, fuel						■			
Filter, hydraulic			□		■				
Fluid, hydraulic	▲	▲				■			
Fluid pump	▲	▲							
Hydraulic hoses	▲	▲							
Hydraulic tank			▽						

Service	Startup	10 Hours	50 Hours	250 Hours	500 Hours	1000 Hours	2000 Hours	4000 Hours	As Needed
Oil, engine	▲	▲			□	■			
Oil, fluid pump	▲	▲	□				■		
Oil, ground drive gearbox			▲			■			
Oil, pump drive gearbox			▲		□	■			
Oil, rotation gearbox			▲		□	■			
Pipe auto-lubricator	▲	▲							
Pipe guide inserts	▲								■
Pipe loader inserts	▲								
Radiator			▲						▽
Radiator cap					▲				
SaverLok			▲						■
Slide blocks			▲						
Tool joint compound	▲	▲							■
Track tension	▲	▲							▽
Water separator	▲	▲							
Wrench jaw inserts	▲								

Procedures

Battery




WARNING Explosive hydrogen gas. Fire or explosion can cause death or serious injury. Keep heat flames, sparks, and other sources of ignition away.

To help avoid injury:

- Use a single 12V maximum source for charging. Never connect to rapid chargers or dual batteries.
- Never lean over battery when making connections.
- Never allow vehicles to touch when charging.
- Never short-circuit battery terminals for any reason or strike battery posts or cable terminals.
- Refer to Safety Data Sheet (SDS) for additional information regarding battery.




WARNING Corrosive fluid. Contact can cause death or serious injury. Avoid contact. Wear appropriate gloves. See Safety Data Sheet (SDS) for more information.

To help avoid injury:

- Never attempt to charge a battery that is leaking, bulging, heavily corroded, frozen, or otherwise damaged.
- Refer to Safety Data Sheet (SDS) for additional information regarding battery.

NOTICE:

- Electronic components can be easily damaged by electrical surges. Jump starting can damage electronics and electrical systems, and is not recommended. Try to charge the battery instead. Use quality large diameter jumper cables capable of carrying high currents (400 amps or more). Low quality cables may not allow enough current flow to charge a dead/discharged battery.
- Read all steps thoroughly and review illustration before performing procedure.

Check every 10 hours. Charge as needed.

Check

1. Disconnect battery at battery disconnect switch, if equipped.
2. Ensure no ignition sources are near battery.
3. Loosen and remove battery cable clamps carefully, negative (-) cable first.
4. Clean cable clamps and terminals to remove dull glaze.
5. Check for signs of internal corrosion in cables.
6. Connect battery cable clamps, positive (+) cable first.
7. Tighten any loose connections.
8. Ensure that battery tiedowns are secure.
9. Turn battery disconnect, if equipped, on.

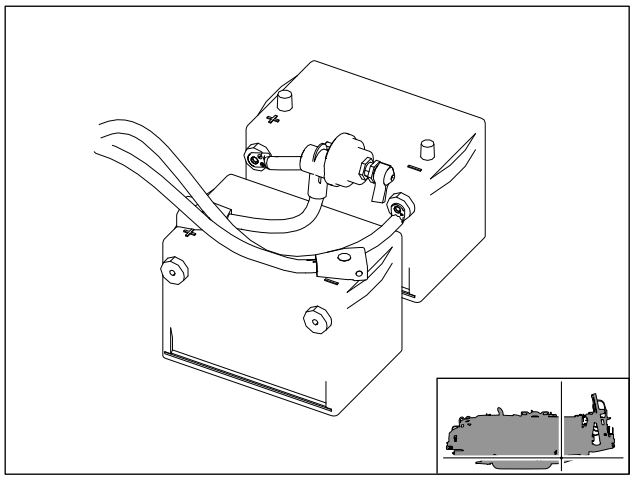

j79om031h19.eps

Charge

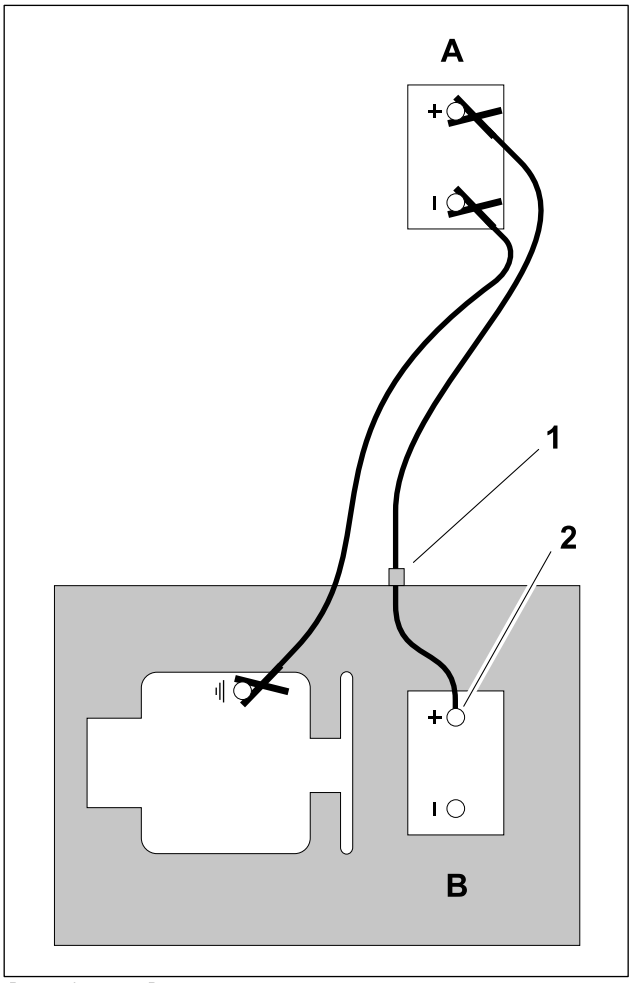

Battery_Jumpstart_B.eps

1. Park service vehicle close to disabled machine but do not allow vehicles to touch.
2. Set parking brake in both vehicles.
3. Turn ignition switch off in both vehicles and turn off all electrical loads.
4. Disconnect machine controller, if equipped.
5. Inspect battery in disabled machine (B) for signs of cracking, bulging, leaking, or other damage.
6. Connect red positive (+) jumper cable clamp to positive (+) post of battery (2) in disabled machine.

   IMPORTANT: Some machines may have a positive jumper cable terminal located externally (1). If so equipped, connect red positive (+) jumper cable clamp to terminal.

7. Connect the other red positive (+) jumper cable clamp to positive (+) post of battery in service vehicle (A).
8. Connect black negative (-) cable clamp to negative (-) post of battery in service vehicle.
9. Connect the other black negative (-) cable clamp to engine or frame ground on disabled vehicle (1), at least 12" (305 mm) from failed battery, as shown.
10. Operate service vehicle engine at 1500-2000 rpm for a few minutes to build an electrical charge in failed battery.
11. Stop engine in service vehicle.
12. Remove jumper cables from service vehicle, black negative (-) clamp first. Do not allow clamps to touch.
13. Remove black negative (-) cable clamp from disabled engine or frame ground.
14. Remove red positive (+) cable clamp from disabled machine.
15. Reconnect machine controller.
16. Start disabled machines.

Battery, Wireless Remote Control

Change batteries when low battery indicator is displayed. Install six AA batteries as shown.

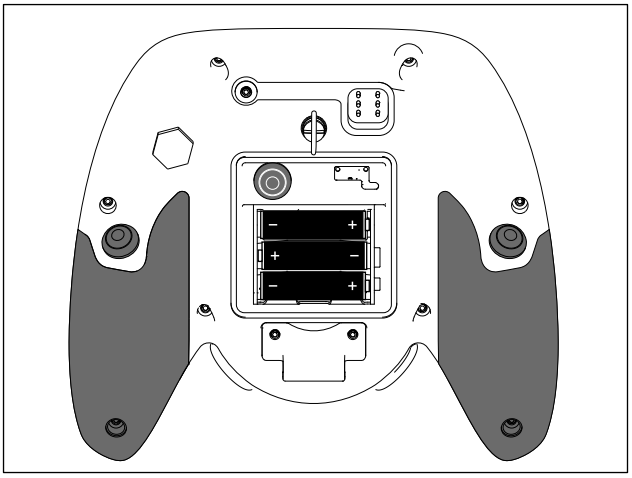

Remote_Battery.eps

Belt, Engine Drive

Check engine drive belt for wear every 50 hours. Change as needed.

1. Remove tension at pulley (1).
2. Remove belt (2).
3. Inspect engine belt tensioner (3) for damage and debris. Replace if needed.
4. Install new belt.

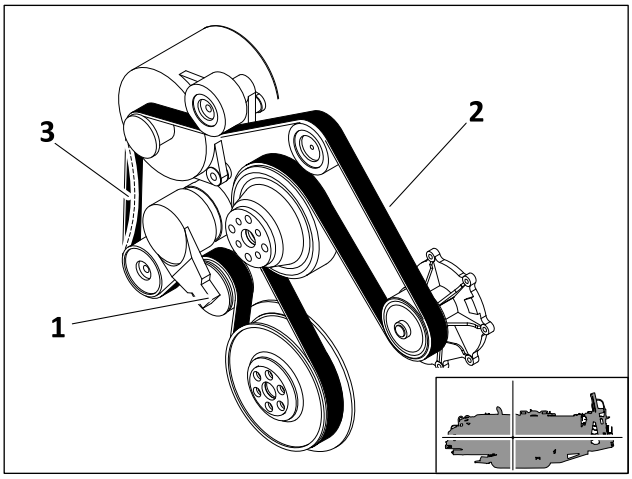

j79om037h19.eps

Coolant

IMPORTANT: See "Approved Coolant" on page 170.

Check before startup and every 10 hours. Change every two years or 2000 hours.

Check

1. Check level at sight glass (1, above) or expansion tank halfway point (1, below).
2. Add DEAC at fill (2) as needed to keep level at halfway point on sight glass or expansion tank.

Change

1. Remove fill cap (2).
2. Remove plug (3) to drain.
3. Install plug.
4. Add DEAC at fill at a rate of 3 gpm (11.4 L/min) to keep level at halfway point on sight glass or expansion tank.
5. Start engine.
6. Run engine at 195°F (90°C) for several minutes.
7. Stop engine and let cool.
8. Check coolant level.
9. Add DEAC at fill as needed to keep level at halfway point on sight glass or expansion tank.

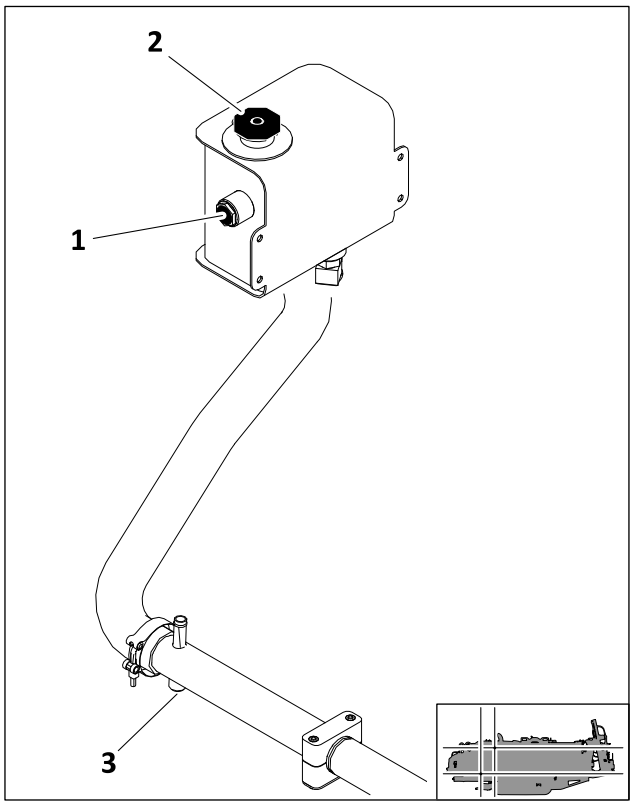

j79om032h19.eps

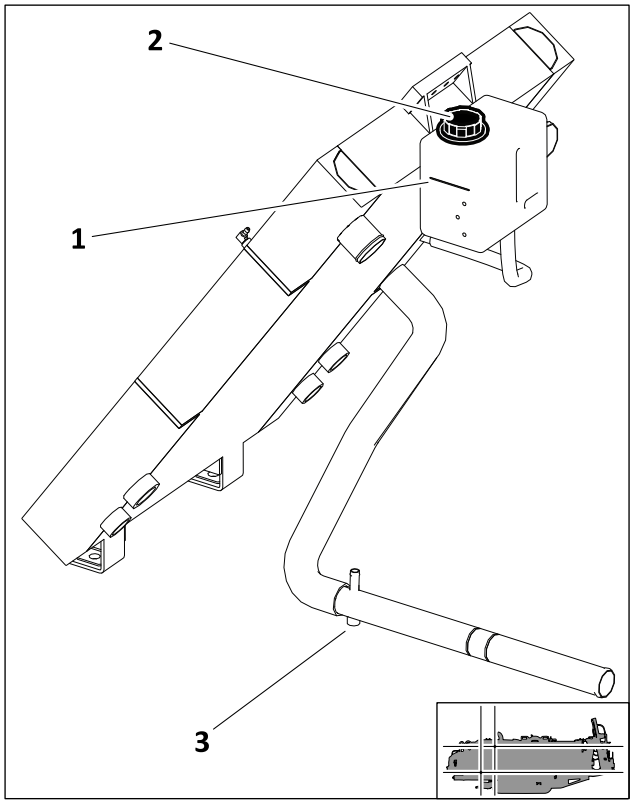

j79om001w25.eps

Drilling Fluid Y-Strainer

Check y-strainer before startup and every 10 hours. Ensure y-strainer is free of obstructions and operates properly. Clean as needed.

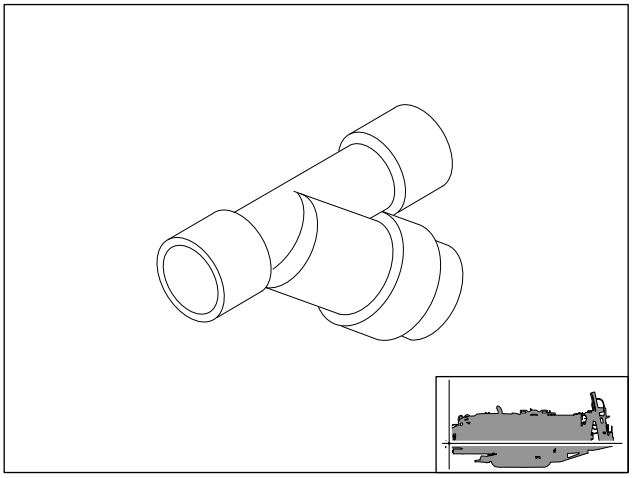

j79om034h19.eps

Dust Ejector Valve

Check valve (shown) before startup and every 10 hours. Ensure valve is not inverted, damaged, plugged, or cracked.

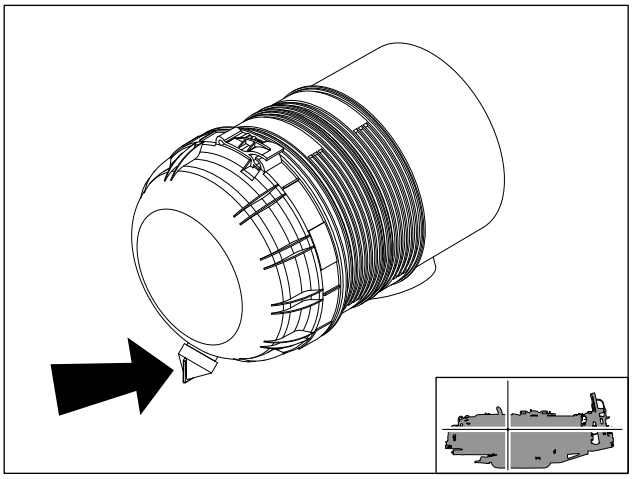

j79om035h19.eps

Engine Compartment

NOTICE:

- Check more often if operating in large brush or grassy conditions.
- Do not use water or compressed air to remove debris.

Check engine compartment (shown) for debris every 50 hours and after long-term storage. Manually clean out debris as needed.

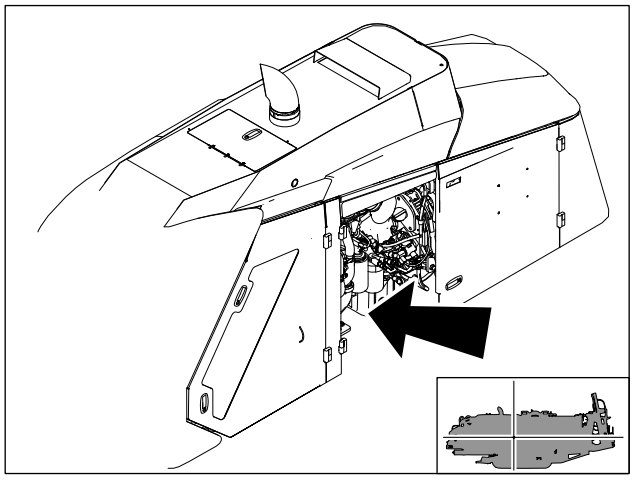
j79om036h19.eps

Filter, Air

NOTICE:

- Change elements. Do not attempt to clean them.
- Compressed air or water may damage elements.
- Tapping to loosen dirt may damage elements.

Change air filter when red band on air filter service indicator (5) is visible.

1. Remove cover (1).
2. Remove primary element (2) and secondary element (3).
3. Wipe inside of housing and wash cover.
4. Insert new secondary element and ensure it is seated correctly.
5. Insert new primary element.
6. Install cover with dust ejector (4) facing down.
7. Reset air filter restriction indicator.

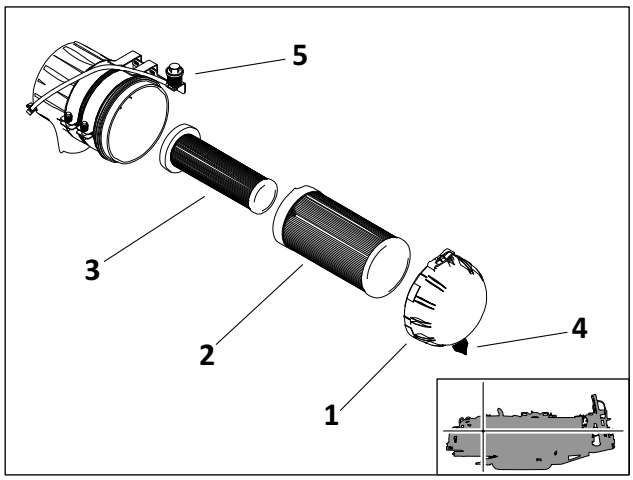

j79om038h19.eps

Filter, DEF Tank

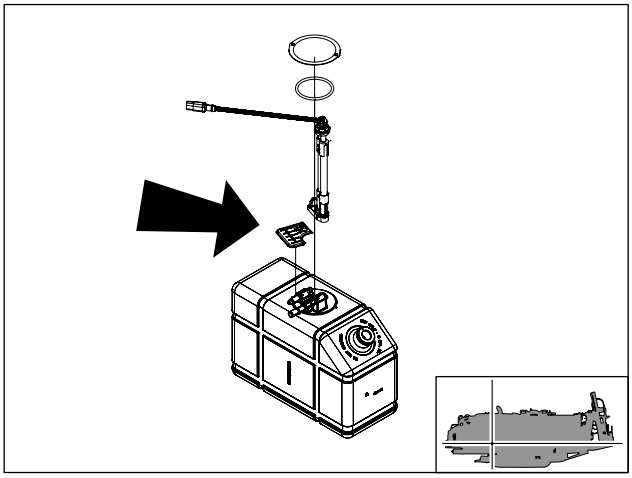
j79om039h19.eps

Change every 1000 hours.

1. Remove multifunction head unit from DEF tank.
2. Remove retention screw and discard.
3. Pull filter (shown) off suction tube and discard.
4. Position new filter suction tube housing onto bottom of suction tube and press flush against bottom of heater tube fin. Ensure filter retention screw aligns with retention screw housing.
5. Install new retention screw.
6. Install multifunction head unit into DEF tank.

Filter, DEF Pump

NOTICE: DEF pump filter may need to be cleaned more frequently in dusty or grassy conditions.

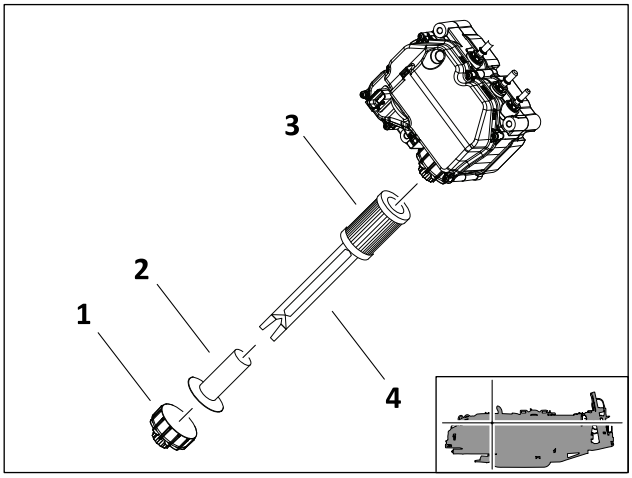

j79om040h19.eps

Change every 4000 hours. Change every 2000 hours in dusty conditions.

1. Remove DEF filter cap (1) and inspect threads for damage. Replace if needed.
2. Remove DEF filter equalizing element (2).
3. Remove DEF filter dosing unit filter element (3) using disposable service tool (4).

IMPORTANT: Disposable service tool is included with filter.

- Use color of plastic on filter to determine which end of tool to use.
- Tool clicks into place when inserted correctly.

4. Slide DEF filter equalizing element into DEF filter dosing element.
5. Insert filter element assembly into DEF pump.
6. Install cap and torque to 177 in•lb (20 N•m).

Filter, Fuel

Change filters (shown) every 1000 hours.

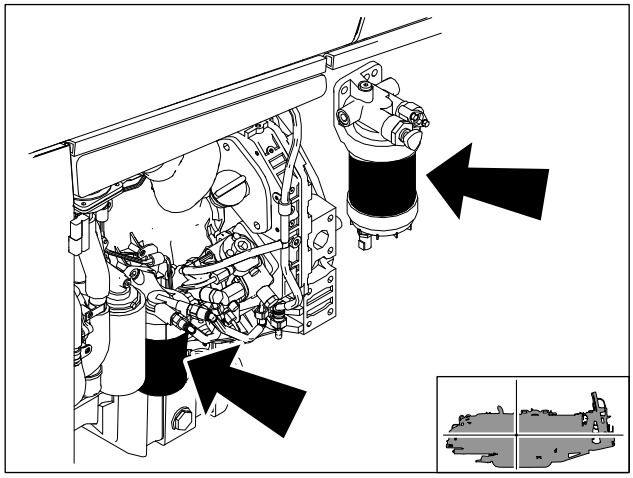

j79om041h19.eps

Filter, Hydraulic

NOTICE:

- Change filter more often as indicated by filter indicator.
- If hydraulic system must be opened for repair, install new hydraulic filter. If new filter becomes plugged in fewer than 20 hours, replace.

Change filters at 50 hours and every 500 hours thereafter.

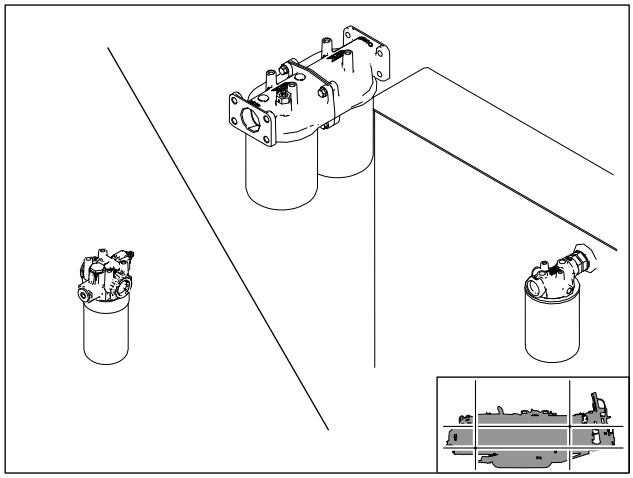

j79om042h19.eps

Fluid, Hydraulic

IMPORTANT: Replace hydraulic filter each time hydraulic system is opened.

Check before startup and every 10 hours. Change every 1000 hours.

Check

1. Check level at sight glass (2).
2. Add THF at fill (1) as needed to keep level at halfway point on sight glass.

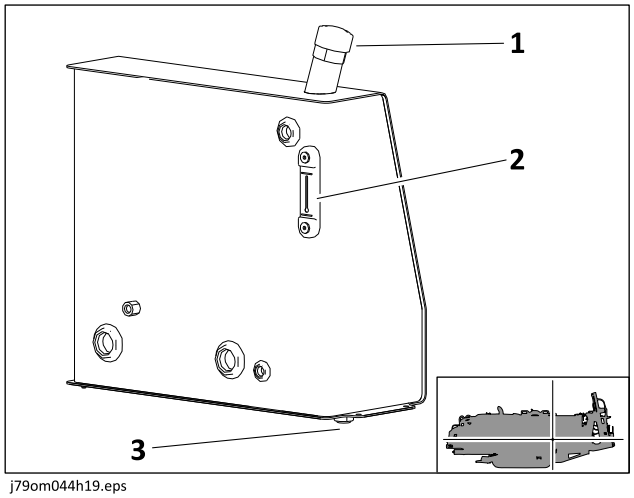

j79om044h19.eps

Change

1. Remove plug (3) to drain.
2. Install plug.
3. Add THF at fill as needed to keep level at halfway point on sight glass.

Fluid Pump

Check ball valve (1) for leaks every 10 hours. Tighten stem packing as needed.

Check piston seals (2) for signs of excessive leaking before startup and every 10 hours. Replace if needed.

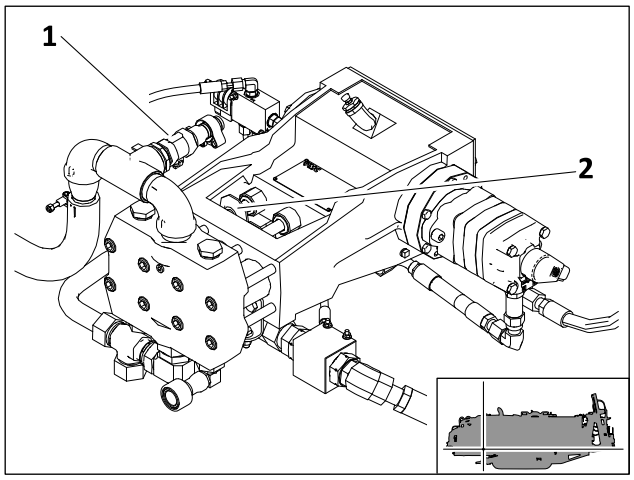

j79om043h19.eps

Hydraulic Hoses



WARNING Pressurized fluid or air. Injection can cause death or serious injury. Refer to operator's manual for correct use.

To help avoid injury:

- Use a piece of cardboard or wood, rather than hands, to check for leaks.
- Before disconnecting a hydraulic line, turn engine off and operate all controls to relieve pressure.
- Contact your Ditch Witch dealer for assistance with relieving trapped pressure.
- Lower, block, or support any raised component with a hoist.
- Cover connection with heavy cloth and loosen connector nut slightly to relieve residual pressure. Catch all fluid in a container.
- Before using system, check that all connections are tight and all lines are undamaged.
- If you are injured, seek immediate medical attention from a doctor familiar with this type of injury.

Check for leaks where shown before startup and every 10 hours of operation.

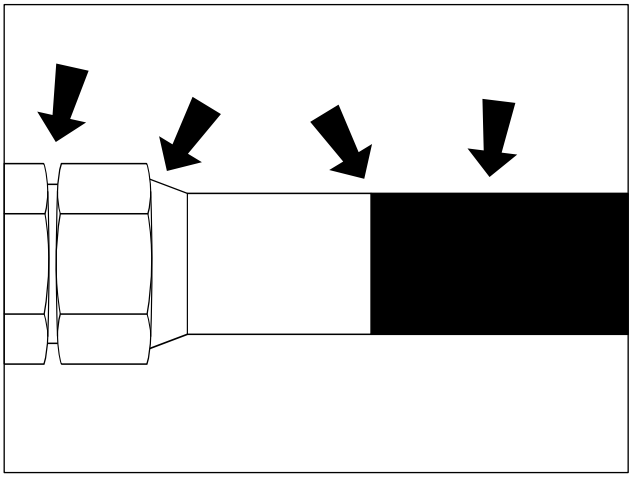

CheckHoses.eps

Hydraulic Tank

Drain water from tank every 50 hours.

1. Turn plug (shown) slightly until water comes out.
2. Tighten plug.

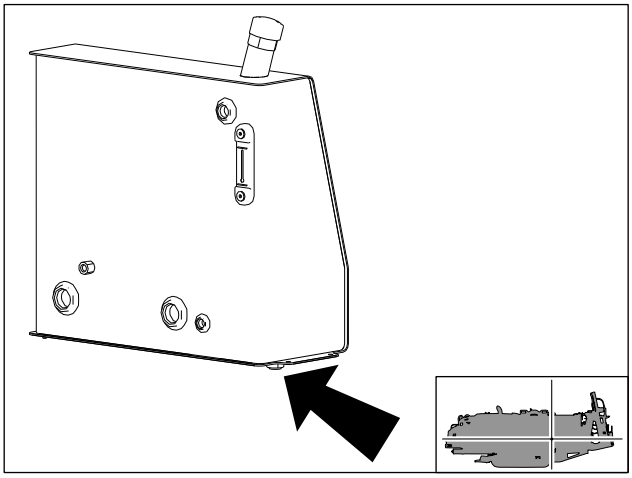

j79om045h19.eps

Oil, Engine

Check before startup and every 10 hours. Change at 500 hours and every 1000 hours thereafter.

Check

1. Check level at dipstick (1).
2. Add DEO at fill (2) as needed to keep level at highest line on dipstick.

Change

1. Remove plug (3) to drain.

   IMPORTANT: If a remote oil drain is not equipped, remove plug from bottom of oil pan (shown).

2. Install plug.
3. Remove filter (4) and replace with new filter.
4. Add DEO at fill to keep level at highest line on dipstick.
5. Start engine.
6. Run engine until operating temperature is reached.
7. Turn off machine.
8. Check level.
9. Add DEO at fill as needed to keep level at highest line on dipstick.

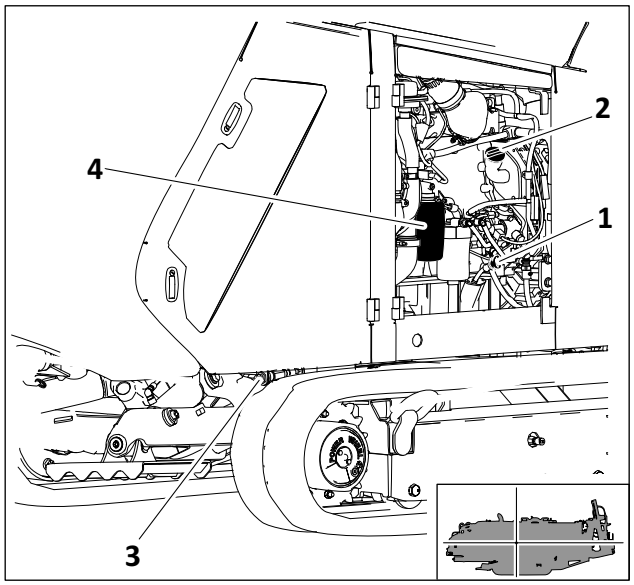

j79om046h19.eps

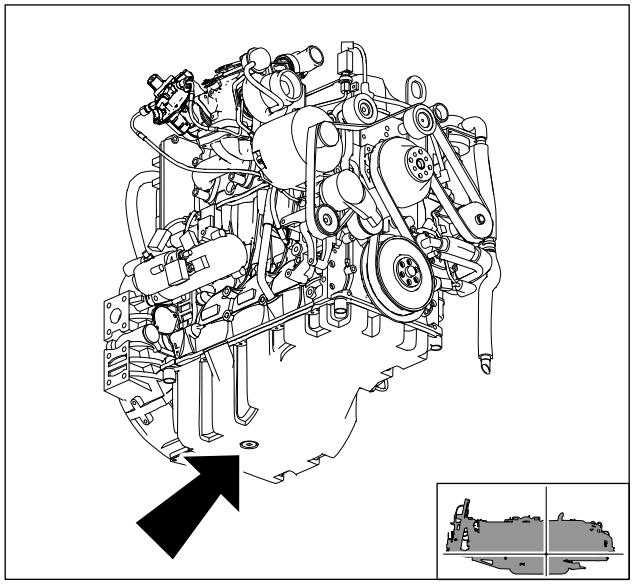
j79om080h19.eps

Oil, Fluid Pump

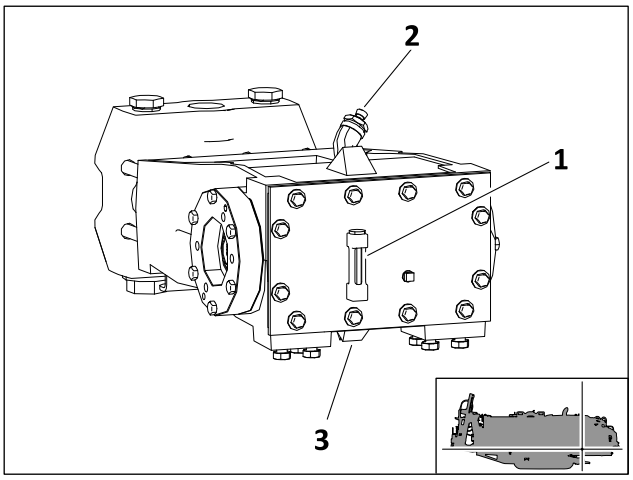

j79om047h19.eps

Check before startup and every 10 hours. Change at 50 hours and every 2000 hours thereafter.

Check

1. Check level at sight glass (1).
2. Add PF at fill (2) as needed to keep level at halfway point on sight glass.

Change

1. Remove plug (3) to drain.
2. Ensure plug is free of dirt and debris.
3. Install plug.
4. Add PF at fill to keep level at halfway point on sight glass.

Oil, Ground Drive Gearbox

IMPORTANT:

- Use helper to assist in positioning gearbox plugs for checking and adding oil.
- Do not fill more than halfway.

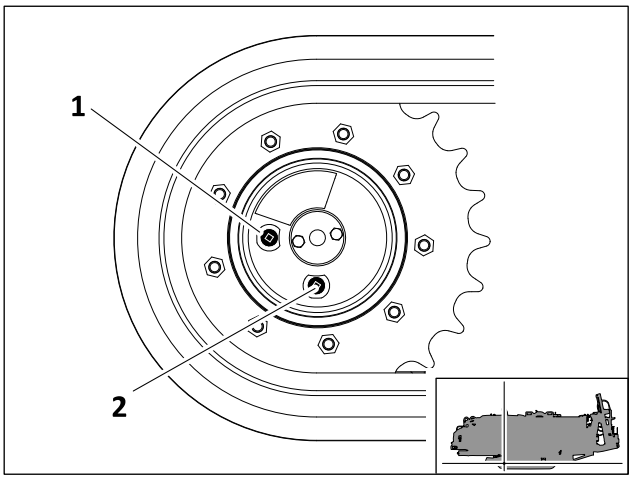

j79om048h19.eps

Check every 50 hours. Change every 1000 hours.

Check

1. Rotate gearbox until plug is in fill position (1).
2. Remove plug.
3. Add MPL at fill as needed to keep level visible.
4. Repeat for each gearbox.

Change

1. Rotate gearbox until plug is in drain position (2).
2. Remove plug to drain.
1. Rotate gearbox until plug is in fill position.
2. Add MPL at fill to keep level visible.
3. Install plug.
4. Repeat for each gearbox.

Oil, Pump Drive Gearbox

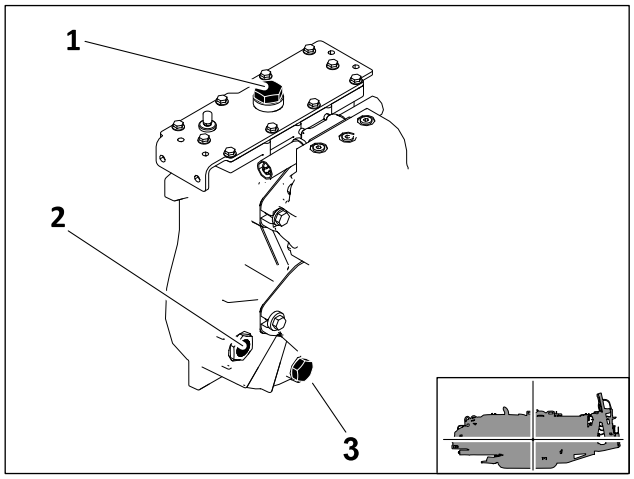

j79om066h19.eps

Check every 50 hours. Change at 500 hours and every 1000 hours thereafter.

Check

1. Check level at sight glass (2).
2. Add MPL at fill (1) as needed to keep level at halfway point on sight glass.

Change

1. Remove plug (3) to drain.
2. Install plug.
3. Add MPL at fill as needed to keep level at halfway point on sight glass.

Oil, Rotation Gearbox

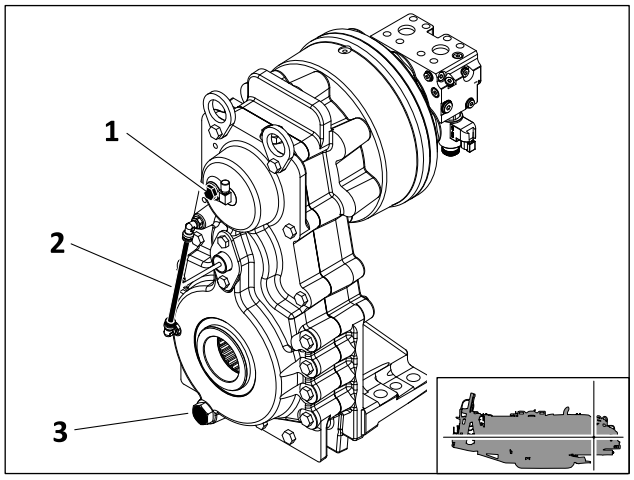

j79om049h19.eps

Check every 50 hours. Change at 500 hours and every 1000 hours thereafter.

Check

1. Check level at sight tube (2).
2. Add MPL at fill (1) as needed to keep level at indicated point on sight glass.

Change

1. Remove plug (3) to drain.
2. Install plug.
3. Add MPL at fill to keep level at indicated point on sight glass.

Pipe Auto-Lubricator

Check before startup and every 10 hours. Clean as needed.

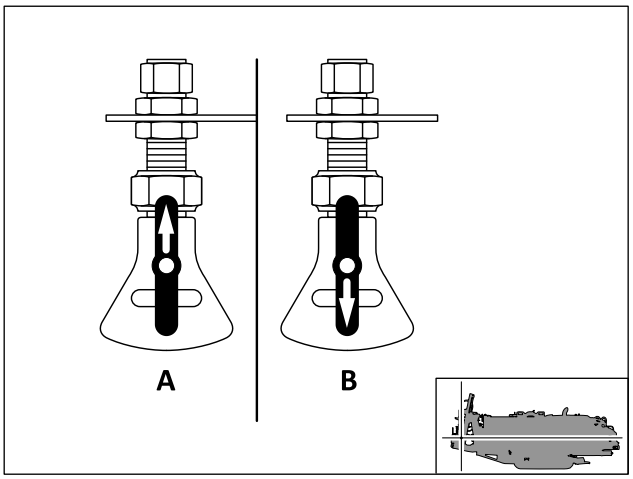

j79om050h19.eps

Check

Ensure that nozzle is free of obstructions and operates properly.

Clean

1. Rotate handle upward to the clean position (A).
2. Operate pump until obstruction is flushed.

> ***NOTICE:*** If neoprene washer is dislodged while cleaning, entire nozzle must be replaced.

3. Rotate handle down to the spray position (B).
4. Clean nozzle guard. If necessary, pull handle/nozzle insert out of housing to clean with fine wire or solvent.

Pipe Guide Inserts

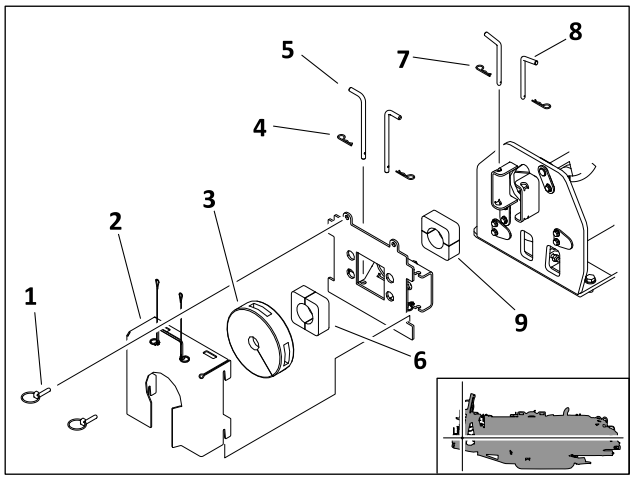

j79om051h19.eps

IMPORTANT: Inserts can be rotated for longer wear.

Check before startup and every 10 hours. Change as needed.

Check

Check for wear.

Change

To replace front inserts:

1. Remove lynch pins (1).
2. Remove wiper catch (2).
3. Remove split rod wiper (3), if equipped.
4. Remove cotter pins (4) to remove pins (5).
5. Remove guide inserts (6).
6. Reassemble.

To replace rear inserts:

1. Remove cotter pins (7) to remove pins (8).
2. Remove guide inserts (9).
3. Reassemble.

Pipe Loader Inserts

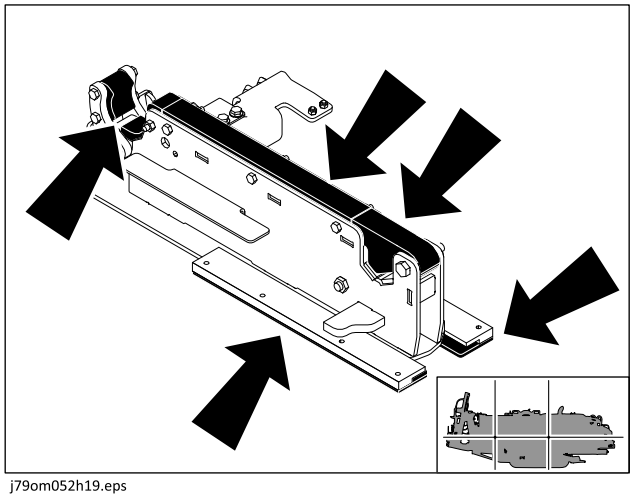
j79om052h19.eps

IMPORTANT:

- Inserts can be flipped over for longer wear.
- Ensure bolts are tightened evenly to enable inserts to slide freely and wear evenly.

Check where shown for wear before startup. Change as needed.

Radiator

NOTICE: Radiator may need to be cleaned more frequently in dusty or grassy conditions.

Check every 50 hours. Clean as needed.

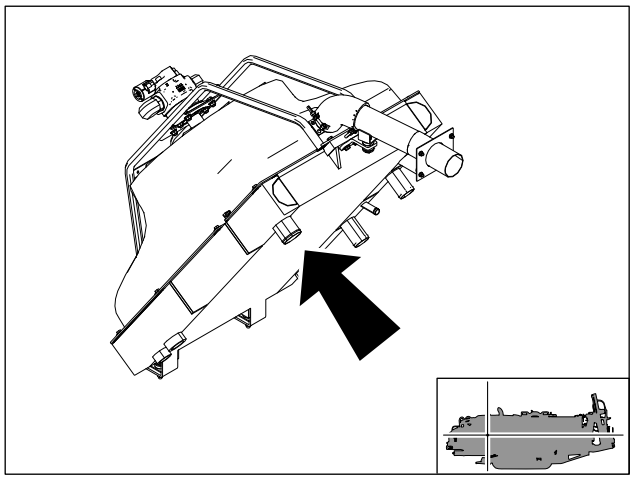
j79om053h19.eps

Check

Check radiator (shown) for dirt, grass, and other debris.

Clean

1. Clean fins with compressed air or spray wash.

NOTICE: Cleaning with high pressure air or water can damage fins.

2. Open rear hood and spray through radiator toward engine.
3. If grease and oil are present on radiator, spray with solvent and allow to soak overnight.

Radiator Cap



⚠ CAUTION Hot parts. Contact can cause burns. Only touch when cool or wear gloves.

To help avoid injury: Wait for machine to cool before inspecting radiator cap.

Inspect radiator cap (shown) every 500 hours. Ensure rubber seal is not damaged. Replace as needed.

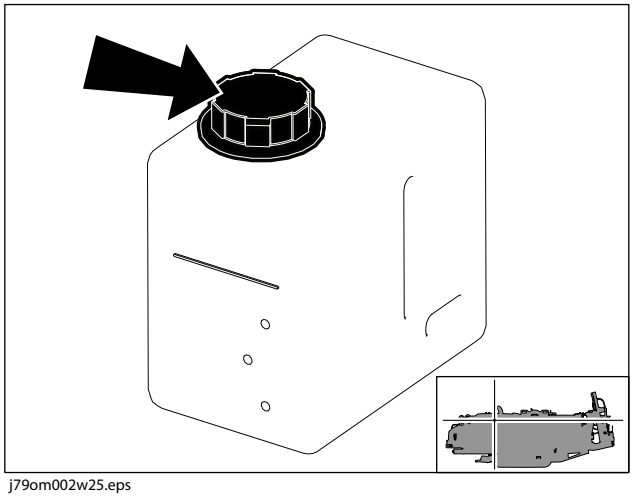
j79om002w25.eps

Rotation Gearbox

Lube rotation gearbox splines with EPG every 1000 hours.

1. Disconnect battery.
2. Clean rotation gearbox area.
3. Disconnect hose and remove water swivel.
4. Remove SaverLok collar.
5. Remove sliding shaft from front side of gearbox.
6. Clean and dry all components.
7. Coat internal splines in gearbox with EPG.
8. Coat sliding output shaft splines with EPG.
9. Reassemble.
10. Connect battery.

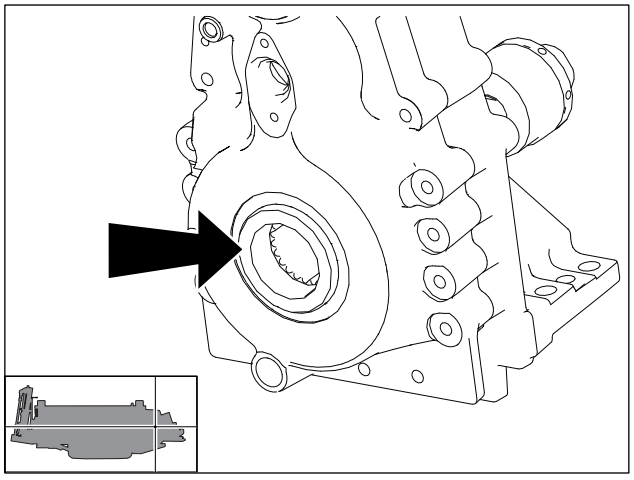

j77om001w20.eps

Rotation Gearbox Output Shaft

Lube rotation gearbox sliding output shaft with EPS every 50 hours.

1. Clean and dry shaft.
2. Apply EPS to shaft. Move shaft in and out manually as needed to ensure all surfaces are covered.

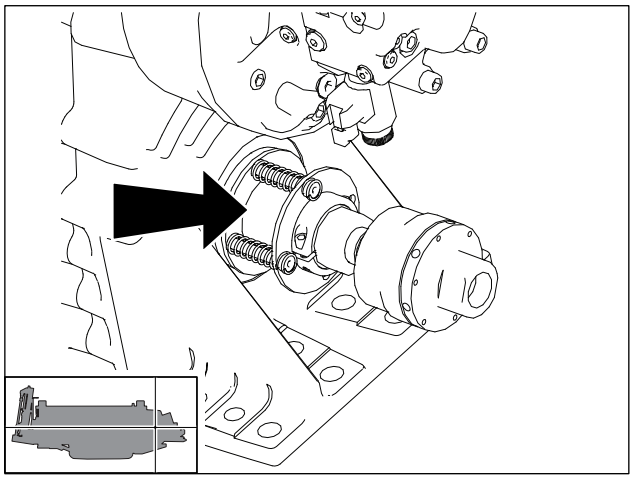

j77om002w20.eps

SaverLok

Check every 50 hours. Change as needed.

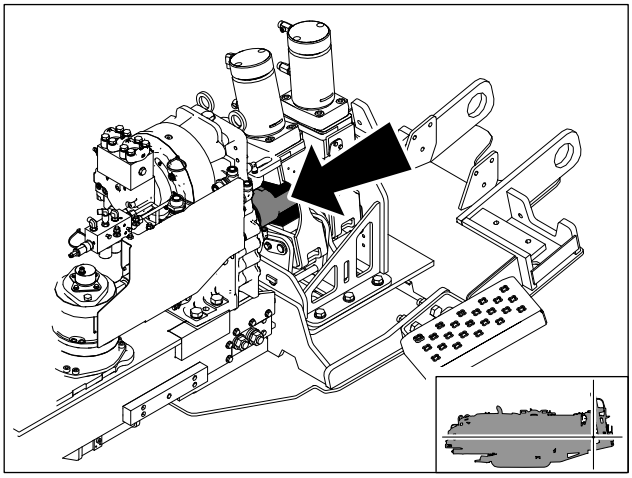
j79om055h19.eps

Check

1. Start engine.
2. Position carriage so that collar can be clamped in rear wrenches.
3. Clamp wrenches on collar and tighten SaverLok assembly until outer rotation pressure gauge reads 4500-5000 psi (310-345 bar) in low speed setting.

Change

To remove:

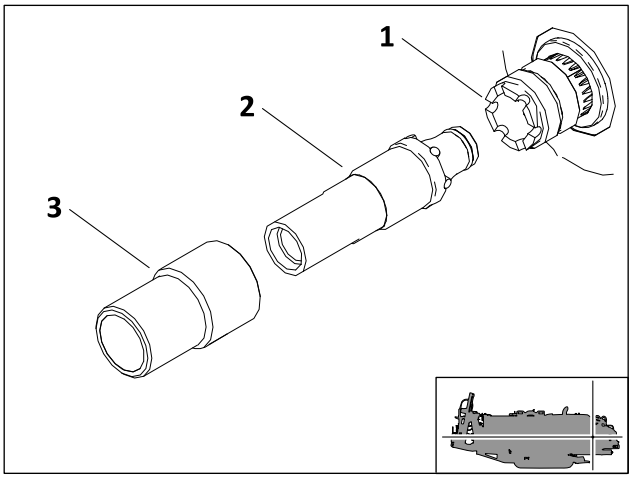

j79om056h19.eps

1. Start engine.
2. Ensure front wrench is clear of all pipe and tooling.
3. Position carriage so collar (3) can be clamped into rear wrench.
4. Clamp rear wrench on collar. Wrench will rotate counterclockwise.

> ***NOTICE:*** Clamping wrench on large diameter of collar or nose of SaverLok will damage threads.

5. Rotate spindle counterclockwise to unthread collar.
6. Remove collar. Set aside.
7. Remove body (2) from connection (1).

> **IMPORTANT:** Machine may not build enough torque to break out collar unless engine is at high throttle.

8. Shut off machine.

To install:

1. Inspect connection for damage.
2. Apply TJC to threads and all surfaces in contact with body and collar.
3. Insert body into connection.
4. Thread body into connection until o-ring is fully engaged using one of the following methods:
   - Slide collar over body and engage threads by hand.
   - Tap nose with rubber mallet until o-ring is fully engaged.
5. Position body by hand for proper engagement of pins and grooves.
6. Slide collar over body and hand-tighten (typically three to four turns).
7. Start engine.
8. Position carriage so collar can be clamped in rear wrenches.
9. Set rotation speed to low.
10. Clamp wrench on collar and tighten assembly until outer rotation pressure gauge reads 4500-5000psi (310-345bar).

> **IMPORTANT:** Machine may not build enough torque to tighten collar unless engine is at high throttle.

11. Immediately loosen collar and repeat process five times to break in the contact surfaces.
12. Tighten assembly until outer rotation pressure gauge reads between 4500-5000 psi (310-345 bar).

> ***NOTICE:*** Clamping wrench on large diameter of collar or nose of SaverLok will damage threads.

13. Shut off machine.

Slide Blocks

Check blocks (shown) for wear every 50 hours. Change as needed.

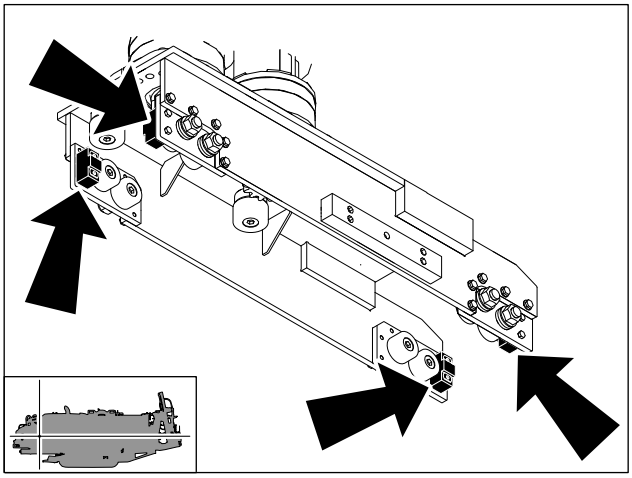

j79om057h19.eps

Tool Joint Compound

NOTICE: Use only genuine Ditch Witch TJC to maintain warranty.

Check before startup and every 10 hours. Change as needed.

Bellows-Style

Check

Check TJC level. Change when bellows is near the base of the canister.

Change

1. Unlatch rubber latches (1).
2. Turn canister 1/8 turn counterclockwise and lift off base.
3. Position new canister over base and turn 1/8 turn clockwise to align with latches.
4. Fasten rubber latches. If TJC does not spray out, turn priming knob (2).

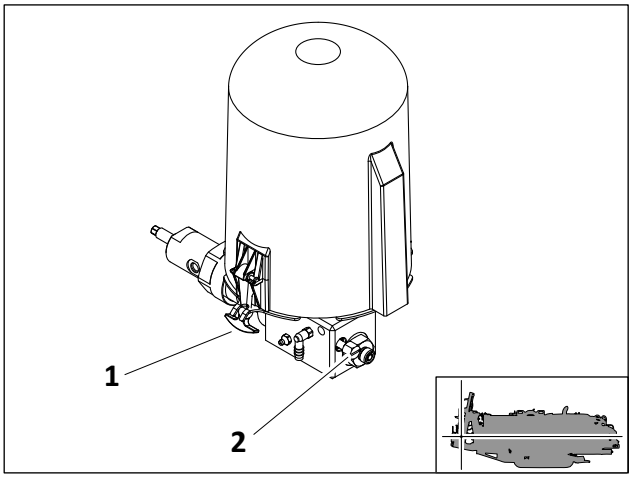

j79om078h19.eps

Pail-Style

Check

Check TJC level in pail.

Change

1. Remove TJC pail (1).
2. Lift pump and lid assembly (2) up guide pole and secure on shoulder bolt (3).
3. Remove follower plate (4) from existing pail.
4. Install follower plate into new pail.
5. Press firmly onto follower plate until TJC comes up in center opening.

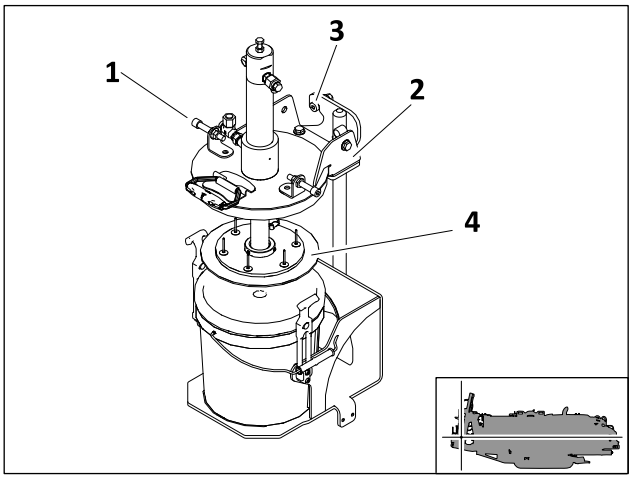

j79om059h19.eps

6. Remove pump and lid assembly from shoulder bolt and lower into pail, guiding pump into center hole of follower plate.
7. Secure TJC pail to pump.
8. Remove cap from discharge tee on pump.
9. Operate pump until discharged TJC is free of air pockets.
10. Replace cap.

Track Tension



WARNING Contents under pressure. Impact can cause death or serious injury. Relieve pressure before opening.

To help avoid injury:

- Service track grease cylinder only while standing away from zerk.
- Cover connection with heavy cloth when relieving pressure in cylinder.

Check before startup and every 10 hours. Adjust as needed.

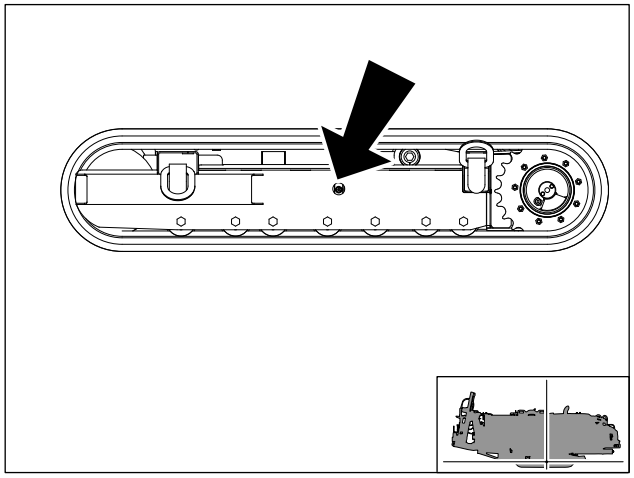

j79om060h19.eps

Check

1. Lift track.
2. Place straightedge across front track span from idler to sprocket as shown.
3. Measure distance from top edge of bottom of track to straightedge. Distance should be 0.75" (19.05 mm).

Adjust

NOTICE: Use provided pressure gauge.

1. Adjust tension.
   - To tighten, pump MPG into fitting (shown) so pressure is 2500 psi (172.37 bar).
   - To loosen, use socket wrench to remove zerk and plug and drain all grease. Then follow tightening procedure above.
2. Drive straight forward one machine length and check tension.

Water Separator

Check water separator (shown) located on fuel filter before startup and every 10 hours. Drain water as needed until fuel runs from drain.

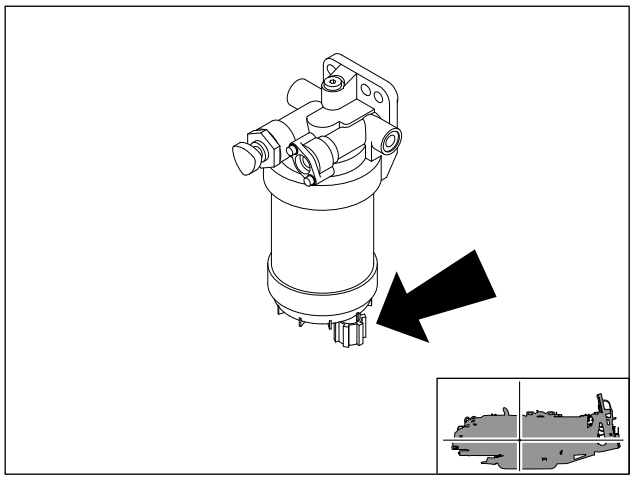

j79om061h19.eps

Wrench Jaw Inserts

Check inserts (shown) before each use. Change as needed.

Check

Check for wear before each use.

Change

1. With wrenches open, remove bolt (1) and washer (2).
2. Remove Inserts (3).
3. Install new inserts.

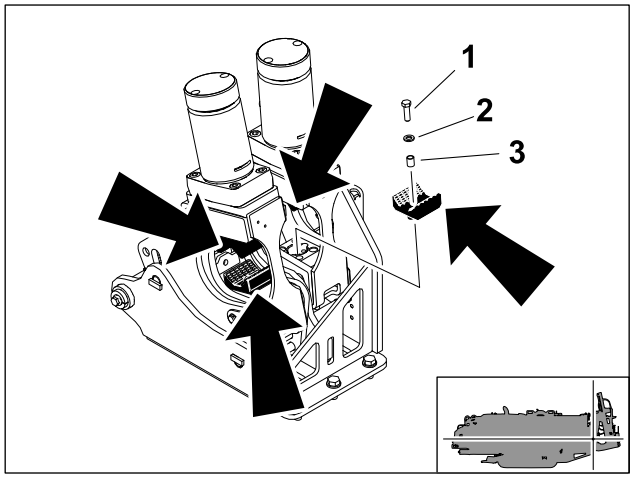

j79om062h19.eps

Specifications

Specifications are called out according to SAE recommended practices. Specifications are general and subject to change without notice. If exact measurements are required, equipment should be weighed and measured. Due to selected options, delivered equipment may not match that shown.

Chapter Contents

JT24 202

EU Declaration of Conformity 206

UK Declaration of Conformity 207

JT24

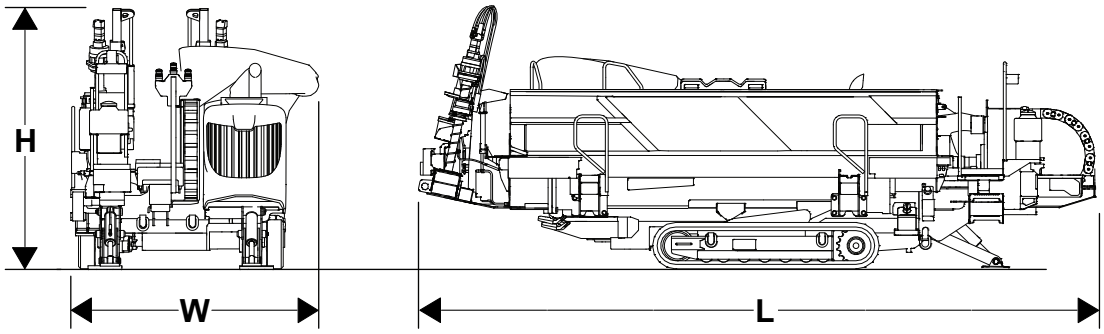

j59om062w.eps

Dimensions		US	Metric
H	Overall machine height		
	Driving*	130.25 in	3.31 m
	Transport*	83 in	2.11 m
L	Overall machine length		
	Driving*	227 in	5.77 m
	Transport*	224.5 in	5.7 m
W	Overall machine width*	65.25 in	1.66 m
Entry angle*		12-18°	12-18°
Angle of approach		17°	17°
Angle of departure		17°	17°

Operation	US	Metric
Maximum spindle speed*	225 rpm	225 rpm
Maximum spindle torque	3000 ft•lb	4076 N•m
Operating mass*	14850 lb	6736 kg
Carriage thrust travel speed*	210 fpm	64 m/min
Carriage pullback travel speed*	216 fpm	66 m/min
Thrust force*	24,000 lb	107 kN
Pullback force*	24,000 lb	107 kN

Operation	US	Metric
Bore diameter	4.50 in	114 mm
Backreamer diameter	soil dependent	
Ground bearing pressure w/PPHD pipe**	9.5 psi	0.67 kg/cm^2
HRC ground bearing pressure, pipe, w/cab**	12.7 psi	0.89 kg/cm^2
Ground clearance**	5.8 in	147 mm
Ground travel speed, forward*	2.8 mph	4.5k m/h
Ground travel speed, reverse*	2.8 mph	4.5 km/h

Power Pipe Forged	US	Metric
Length, nominal*	120 in	3.05 m
Joint diameter*	2.63 in	66.7 mm
Tubing diameter*	2.38 in	63.5 mm
Minimum bend radius*	123 ft	35 m
Weight*	74 lb	33.5 kg
Weight, lined with large box (40 pipe)	3635 lb	1649 kg
Weight, lined with small box (28 pipe)	2720 lb	1234 kg

Power Pipe HD	US	Metric
Length, nominal*	120 in	3.05 m
Joint diameter*	2.63 in	66.7 mm
Tubing diameter*	2.25 in	57.15 mm
Minimum bend radius*	117 ft	35.66 m
Weight, lined*	72.5 lb	32.89 kg
Weight, lined with large box (40 pipe)	3555 lb	1612.5 kg
Weight, lined with small box (28 pipe)	2675 lb	1213 kg
Weight, unlined	68 lb	30.8 kg
Weight, unlined with large box (40 pipe)	3375 lb	1531 kg
Weight, unlined with small box (28 pipe)	2495 lb	1132 kg

Engine		**US**	**Metric**
Engine: Cummins F3.8, Tier 4/Stage V			
	Fuel	Diesel	
	Cooling medium	Liquid	
	Injection	Direct	
	Aspiration	Turbocharged and charge air cooled	
	Cylinders	4	
Displacement		231.89 in^3	3.8 L
Bore		4.02 in	102 mm
Stroke		4.53 in	115 mm
Manufacturer's gross power rating (per SAE J1995)		101 hp	75.32 kW
Estimated net power rating (per SAEJ1349)		99 hp	73.8 kW
Rated speed		2200 rpm	2200 rpm
Peak gross power @1700 rpm		113 hp	84.26 kW

Drilling Fluid System (Onboard)	**US**	**Metric**
Maximum drilling fluid pressure*	1200 psi	83 bar
Maximum drilling fluid flow*	40 gpm	151 L/min

Fluid Capacities	**US**	**Metric**
Hydraulic reservoir	18.75 gal	71 L
Fuel tank	32 gal	121 L
Engine oil, including filter	15.4 qt	14.6 L
Cooling system	20 qt	75.71 L
Antifreeze tank	5 gal	18.9 L
Diesel exhaust fluid tank	5 gal	18.9 L

Battery (2 used)
SAE reserve capacity 110 min, 12V, negative ground, SAE cold crank @ 0°F (-18°C), 800 amps.

Vibration Levels
Average vibration transmitted to the operator's hand during normal operation does not exceed 2.5 m/sec^2. Average vibration transmitted to the whole body during normal operation does not exceed 0.5 m/sec^2.

Noise Level
This machine can generate sound levels exceeding 80 dBA. Always wear appropriate hearing protection when operating machine. Find sound power and pressure information at www.ditchwitch.com, or contact customersupport@ditchwitch.com.

*Per SAE J2022
**Per ISO 16754

EU Declaration of Conformity

The Charles Machine Works Inc., PO Box 66, 1959 West Fir Avenue, Perry, Oklahoma, USA, declares that the following unit(s):

Model	Serial Number	Description
XXXXX	XXXXXXXXXXXXXXXX	Horizontal Directional Drill

Conform(s) to the following directives:

2006/42/EC (Machinery Directive), 2014/30/EU (Electromagnetic Compatibility Directive), and
2000/14/EC (Noise Emission Directive)

Each model listed has been evaluated with the following standards and/or other normative documents:

EN 16228-1:2014
EN 16228-3:2014
EN ISO 13766-1:2018

Data for 2000/14/EC Noise Emission Directive:

Model	Classification	Measured Sound Power (dBA)	Guaranteed Sound Power (dBA)	Engine Speed (rpm)	Engine Power (kW)
XXXXX	Horizontal Directional Drill	XXX	XXX	XXXX	XXX

Determined in accordance with ISO 6395:2008.
Conformity Assessment: Annex V

Data for Regulation (EU) No 517/2014 on Fluorinated Greenhouse Gases (if equipped with cab):

Model	HFC	kg	GWP	CO_2 Equivalent (metric tonnes)
XXXXX	134A	XXXX	1430	XXXX

The Technical Construction File is maintained at the manufacturer's location.

This declaration has been issued under the sole responsibility of the manufacturer.
The object of the declaration is in conformity with relevant Union harmonization legislation.

Certified:

Authorized Representative:

Marcel Dutrieux
Manager European Product Integrity
Toro Europe NV
Nijverheidsstraat 5
2260 Oevel
Belgium

Engineering Director
1959 West Fir Avenue
Perry, OK 73077, USA

Date _____

UK Declaration of Conformity

The Charles Machine Works Inc., PO Box 66, 1959 West Fir Avenue, Perry, Oklahoma, USA, declares that the following unit(s):

Model	Serial Number	Description
XXXXX	XXXXXXXXXXXXXXXX	Horizontal Directional Drill

Conform(s) to the following UK national laws:

S.I. 2001 No.1701 (Noise), S.I. 2008 No.1597 (Machinery Safety), and S.I. 2016 No.1091 (EMC).

Each model listed has been evaluated with the following standards and/or other normative documents:

EN 16228-1:2014
EN 16228-3:2014
EN ISO 13766-1:2018

Data for Noise Regulation (S.I. 2001 No. 1701)

Model	Classification	Measured Sound Power (dBA)	Guaranteed Sound Power (dBA)	Engine Speed (rpm)	Engine Power (kW)
XXXXX	Horizontal Directional Drill	XXX	XXX	XXXX	XXX

Determined in accordance with ISO 6395:2008.
Conformity Assessment: Schedule 8

Data for S.I. 2019 No. 583 (Fluorinated Greenhouse Gases) (if equipped with cab):

Model	HFC	kg	GWP	CO_2 Equivalent (metric tonnes)
XXXXX	134A	XXXX	1430	XXXX

The Technical Construction File is maintained at the manufacturer's location.

This declaration has been issued under the sole responsibility of the manufacturer.
The object of the declaration is in conformity with relevant UK legislation.

Certified:

Authorized Representative:

Marcel Dutrieux
Manager European Product Integrity
Toro U.K. Limited
Spellbrook Lane West
Bishop's Stortford
CM23 4BU
United Kingdom

Engineering Director
1959 West Fir Avenue
Perry, OK 73077, USA

Date _____

Support

Registration

If your equipment was purchased through a Ditch Witch dealer, it is already registered. If you purchased from any other source, please email productsupportwarrantyadmin@ditchwitch.com or fill out the registration card located in the back of the parts manual. Registration enables you to receive updates on this equipment as well as information on new products of interest.

Procedure

Notify your dealer immediately of any malfunction or failure of Ditch Witch equipment.

Always give model, serial number, and approximate date of your equipment purchase. This information should be recorded and placed on file by the owner at the time of purchase.

Return damaged parts to dealer for inspection and warranty consideration if in warranty time frame.

Order genuine Ditch Witch replacement or repair parts from your authorized Ditch Witch dealer. Use of another manufacturer's parts may void warranty consideration.

Resources

Publications

Contact your Ditch Witch dealer for publications and videos covering safety, operation, maintenance, and repair of your equipment.

Ditch Witch Training

For information about on-site individualized training, contact your Ditch Witch dealer.

Warranty

Ditch Witch Equipment and Replacement Parts
Limited Warranty Policy

Subject to the limitation and exclusions herein, free replacement parts will be provided at any authorized Ditch Witch dealership for any Ditch Witch equipment or parts manufactured by the Ditch Witch factory that fail due to a defect in material or workmanship within one (1) year of first commercial use. Free labor will be provided at any authorized Ditch Witch dealership for installation of parts under this warranty during the first year following "initial commercial" use of the serial-numbered Ditch Witch equipment on which it is installed. The customer is responsible for transporting their equipment to an authorized Ditch Witch dealership for all warranty work.

Exclusions from Product Warranty

- All incidental or consequential damages.
- All defects, damages, or injuries caused by misuse (including, but not limited to, rollover), abuse, improper installation, alteration, neglect, or uses other than those for which products were intended.
- All defects, damages, or injuries caused by improper training, operation, or servicing of products in a manner inconsistent with manufacturer's recommendations.
- All engines and engine accessories (these are covered by original manufacturer's warranty).
- Tires, belts, and other parts which may be subject to another manufacturer's warranty (such warranty will be available to purchaser).
- ALL IMPLIED WARRANTIES NOT EXPRESSLY STATED HEREIN, INCLUDING ANY WARRANTY OF FITNESS FOR A PARTICULAR PURPOSE AND MERCHANTABILITY.

IF THE PRODUCTS ARE PURCHASED FOR COMMERCIAL PURPOSES, AS DEFINED BY THE UNIFORM COMMERCIAL CODE, THEN THERE ARE NO WARRANTIES WHICH EXTEND BEYOND THE FACE HEREOF AND THERE ARE NO IMPLIED WARRANTIES OF ANY KIND WHICH EXTEND TO A COMMERCIAL BUYER. ALL OTHER PROVISIONS OF THIS LIMITED WARRANTY APPLY INCLUDING THE DUTIES IMPOSED.

Ditch Witch products have been tested to deliver acceptable performance in most conditions. This does not imply they will deliver acceptable performance in all conditions. Therefore, to assure suitability, products should be operated under anticipated working conditions prior to purchase.

Defects will be determined by an inspection within thirty (30) days of the date of failure of the product or part by Ditch Witch Product Support (DWPS) or its authorized dealer. DWPS will provide the location of its inspection facilities or its nearest authorized dealer upon inquiry. DWPS reserves the right to supply remanufactured replacements parts under this warranty as it deems appropriate.

Extended warranties are available upon request from your local Ditch Witch dealer or the Ditch Witch factory.

Some states do not allow exclusion or limitation of incidental or consequential damages, so above limitation of exclusion may not apply. Further, some states do not allow exclusion of or limitation of how long an implied warranty lasts, so the above limitation may not apply. This limited warranty gives product owner specific legal rights and the product owner may also have other rights which vary from state to state.

For information regarding this limited warranty, contact the DWPS department, P.O. Box 66, Perry, OK 73077-0066, or contact your local dealer.

First version: 1/91; Latest version: 7/19

Emissions Warranty Statement

Federal Emissions Control Warranty Statement
Your Warranty Rights and Obligations

Introduction

Emissions related parts and components of the engine are covered by the Emissions Warranty. Non-emissions related parts and components of the engine are covered by the terms and conditions of the equipment warranty. New equipment that use compression ignition engines must be designed, built, and equipped to meet stringent anti-smog standards. The Charles Machine Works, Inc. must warrant the emissions control system on your equipment for the period listed below provided there has been no abuse, neglect, or improper maintenance of your equipment leading to the failure of the emissions control system.

Your emissions control system may include parts such as: aftertreatment equipment, aftertreatment equipment mounting, DEF lines, DEF tanks, DEF pump, air induction system and other associated emission-related components.

Manufacturer's Warranty Coverage

This emissions control system is warranted for a number of years depending on the power class and speed rating, see table below. If any emission-related part on your equipment is defective, the part will be repaired or replaced by The Charles Machine Works, Inc.

Owner's Warranty Responsibilities

As the equipment owner, you are responsible for performance of the required maintenance listed in your operator's manual. The Charles Machine Works, Inc. recommends that you retain all receipts covering maintenance on your equipment, but The Charles Machine Works, Inc. cannot deny warranty solely for the lack of receipts.

As the equipment owner, you should be aware that The Charles Machine Works, Inc. may deny you warranty coverage if your equipment or a part has failed due to abuse, neglect, improper maintenance, or unapproved modifications.

You are responsible for presenting your equipment to a Ditch Witch® service center as soon as the problem exists. The warranty repairs should be completed in a reasonable amount of time, not to exceed 30 days. If you have a question regarding your warranty coverage, you should contact your local Ditch Witch Dealer or The Charles Machine Works, Inc. at 1-800-433-6652.

General Emissions Warranty Coverage

The Charles Machine Works, Inc. warrants to the ultimate purchaser and each subsequent purchaser that the equipment is:

- Designed, built, and certified to conform with all applicable emissions regulations, and
- Identical in all material respects to the parts as describe in the application for certification, and
- Free from defects in materials and workmanship that could cause the failure of a warranted part.

The warranty period begins on the date the equipment is delivered to an ultimate purchaser. The warranted period is a number of years depending on power and speed rating.

If engine is certified as	And its maximum power is	And its rated speed is	Then it's warranty period is
Variable speed or constant speed	kW < 19 hp < 25	Any speed	1500 hours or two years, whichever comes first
Constant speed	19 ≤ kW < 37 25 ≤ hp < 49	3000 rpm or higher	1500 hours or two years, whichever comes first
Constant speed	19 ≤ kW < 37 25 ≤ hp < 49	Less than 3000 rpm	3000 hours or five years, whichever comes first
Variable speed	19 ≤ kW < 37 25 ≤ hp < 499	Any speed	3000 hours or five years, whichever comes first
Variable speed or constant speed	kW ≥ 37 hp ≥ 49	Any speed	3000 hours or five years, whichever comes first

Subject to certain conditions and exclusions as stated below, the warranty on emission-related parts is as follows:

1. Any warranted part that is not scheduled for replacement as required maintenance in the written instructions supplied, is warranted for the warranty period stated above. If the part fails during the period of warranty coverage, the part will be repaired or replaced by The Charles Machine Works, Inc. Any such part repaired or replaced under warranty will be warranted for the remainder of the warranty period.
2. Any warranted part that is scheduled only for regular inspection in the written instructions supplied is warranted for the warranty period stated above. Any such part repaired or replaced under the warranty will not reduce the period of warranty coverage and will be warranted for the remainder of the warranty period.
3. Any warranted part that is scheduled for replacement as required maintenance in the written instructions supplied is warranted for the period of time prior to the first scheduled replacement date for that part. If the part fails before the first scheduled replacement, the part must be repaired or replaced by The Charles Machine Works, Inc. Any such part repaired or replaced under warranty will be warranted for the remainder of the period up to the first scheduled replacement point for the part.
4. Repair or replacement of any warranted part under the warranty provisions herein must be performed at an Authorized Service Dealer at no charge to the owner.
5. Warranty services or repairs will be provided at all Service Dealers authorized to service the subject equipment.
6. The equipment owner will not be charged for diagnostic labor that is directly associated with diagnosis of a defective, emission-related warranted part, provided that such diagnostic work is performed by an Authorized Service Dealer.
7. The Charles Machine Works, Inc. is liable for damages to other engine or equipment components proximately caused by a failure under warranty of any warranted part.
8. Throughout the emissions control system's warranty period stated above, The Charles Machine Works, Inc. will maintain a supply of warranted parts sufficient to meet the expected demand for such parts.
9. Manufacturer approved replacement parts may be used in the performance of any warranty maintenance or repairs and must be provided without charge to the owner. Such use will not reduce the warranty obligations of The Charles Machine Works, Inc.
10. Add-on or modified parts that are not approved by The Charles Machine Works, Inc. will not be liable to warrant failures of warranted parts caused by the use of non-approved, add-on, or modified parts.

Warranted Parts

The repair or replacement of any warranted part otherwise eligible for warranty coverage may be excluded from such coverage if The Charles Machine Works, Inc. demonstrates that the equipment has been abused, neglected, or improperly maintained, and that such abuse, neglect, or improper maintenance was the direct cause of the need for repair or replacement of the part. That notwithstanding, any adjustment of a component that has a factory installed, and properly operating, adjust limiting device is still eligible for warranty coverage. The following emissions warranty parts list are covered.

- aftertreatment equipment
- aftertreatment equipment mounting brackets
- DEF tank
- DEF hoses
- DEF pump
- DEF filter
- electronic controls
- fuel lines when connected to exhaust aftertreatment equipment
- fuel line clamps when connected to exhaust aftertreatment equipment
- air filter
- air filter hoses and connections